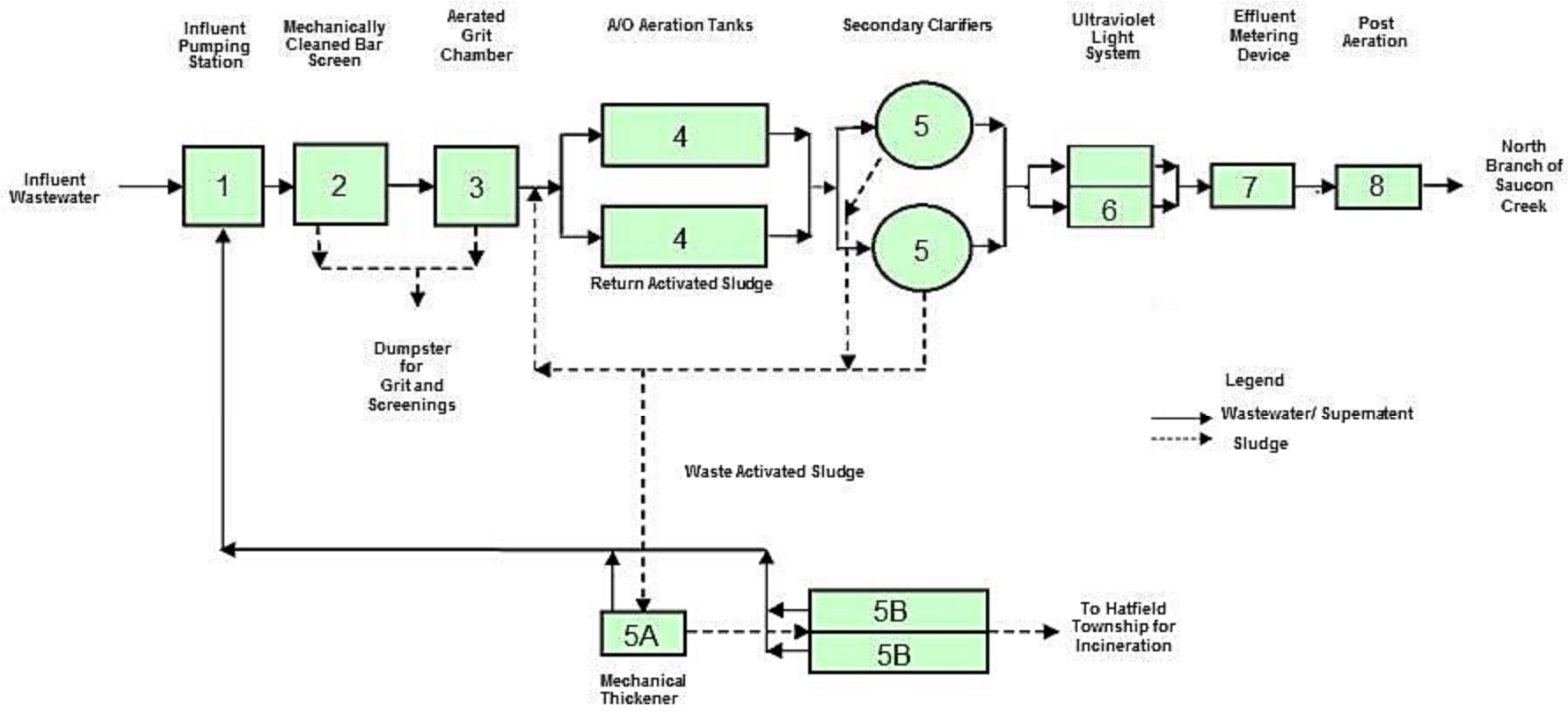UPPER SAUCON TOWNSHIP
WASTEWATER TREATMENT PLANT
PROCESS FLOW DIAGRAM