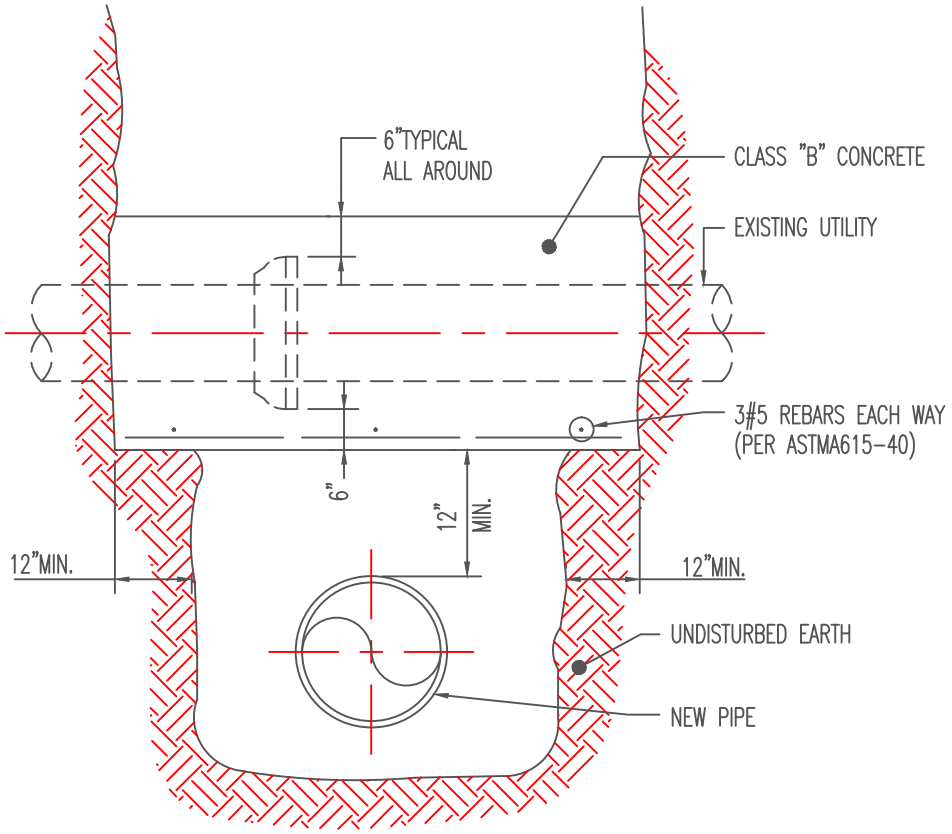

ENCASEMENT OF EXISTING PIPE

NOTES:

1. BACKFILL AROUND NEW PIPE TO WITHIN 6" OF BELL OF EXISTING PIPE.
2. LEDGE 12" EACH SIDE OF TRENCH ON UNDISTURBED EARTH
3. UPON LEDGES AND BACKFILL, PLACE REINFORCED STEEL AS SHOWN AND POUR CONCRETE 6" ON OUTSIDE BELL
4. COMPLETE BACKFILLING AFTER CONCRETE HAS SET AT LEAST 24HR.

SCHREITER ENGINEERING ASSOCIATES
Engineers Planners Scientists
7 Raleigh Drive
Downingtown, PA.
19335-1107
Tel (610) 873-0520
Fax (610) 873-0520
Email KES1@AOL.COM

UPPER SAUCON TOWNSHIP
ENCASEMENT OF EXISING PIPE

NAME:			
DATE: 06/01/2014	REVISED:	REVISED:	
DRAWN: ACD	REVISED:	REVISED:	
SCALE: N.T.S.	CAD File Name: D1		

D1

No.

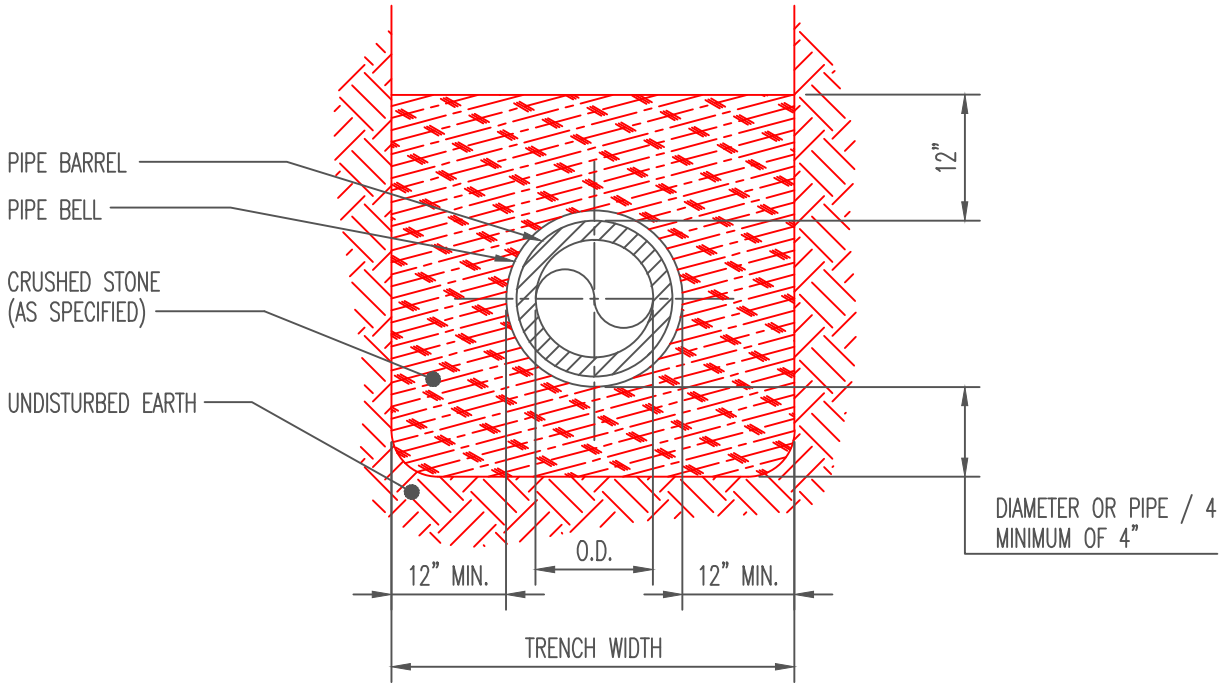

SCHREITER ENGINEERING ASSOCIATES
Engineers Planners Scientists
7 Raleigh Drive
Downingtown, PA.
19335-1107
Tel (610) 873-0520
Fax (610) 873-0520
Email KE316@AOL.COM

NAME:	UPPER SAUCON TOWNSHIP CRUSHED STONE ENCASEMENT ALL PIPE		D2
DATE: 06/01/2014	REVISED:	REVISED:	
DRAWN: ACD	REVISED:	REVISED:	
SCALE: N.T.S.	CAD File Name: D2		No.

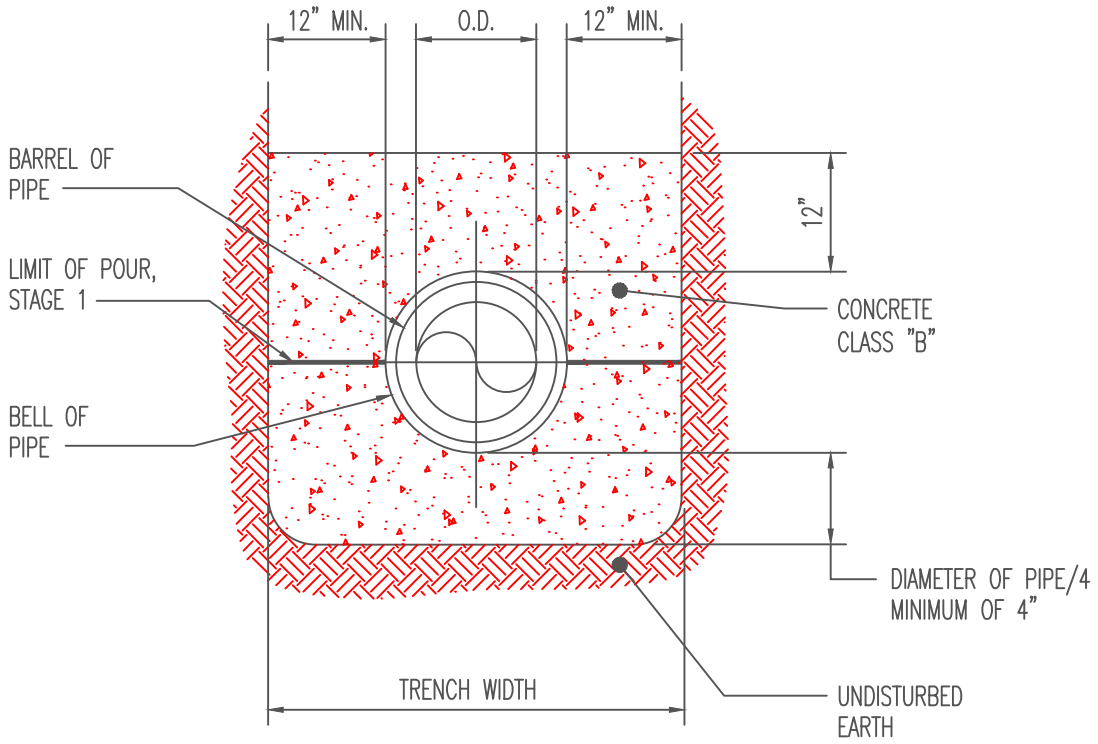

METHOD OF ENCASING P.V.C. PIPE IN CONCRETE

STAGE No.1–INSTALL CONCRETE FROM BOTTOM OF TRENCH TO CENTER LINE OF PIPE.

STAGE No.2–AFTER 24 HOUR PERIOD INSTALL CONCRETE FROM CENTER LINE OF PIPE TO 12" ABOVE BARREL OF PIPE.

SCHREITER ENGINEERING ASSOCIATES
Engineers Planners Scientists
7 Raleigh Drive
Downingtown, PA.
19335–1107
Tel (610) 873–0520
Fax (610) 873–0520
Email KES1@AOL.COM

NAME:	UPPER SAUCON TOWNSHIP CONCRETE ENCASEMENT OF PVC PIPE		D3
DATE: 06/01/2014	REVISED:	REVISED:	
DRAWN: ACD	REVISED:	REVISED:	
SCALE: N.T.S.	CAD File Name: D3		No.

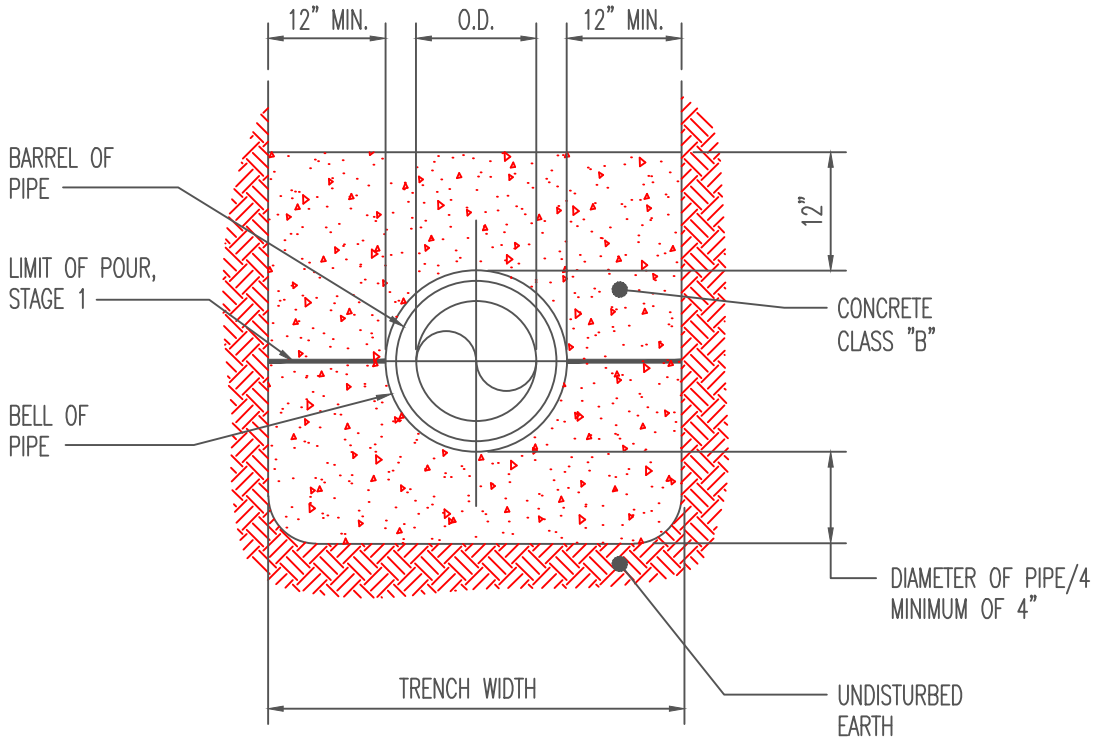

SCHREITER ENGINEERING ASSOCIATES
Engineers Planners Scientists
7 Raleigh Drive
Downingtown, PA.
19335-1107
Tel (610) 873-0520
Fax (610) 873-0520
Email KES1@AOL.COM

NAME:	UPPER SAUCON TOWNSHIP CONCRETE ENCASEMENT OF ALL PIPE EXCEPT PVC PIPE		D4
DATE: 06/01/2014	REVISED:	REVISED:	
DRAWN: ACD	REVISED:	REVISED:	
SCALE: N.T.S.	CAD File Name: D4		No.

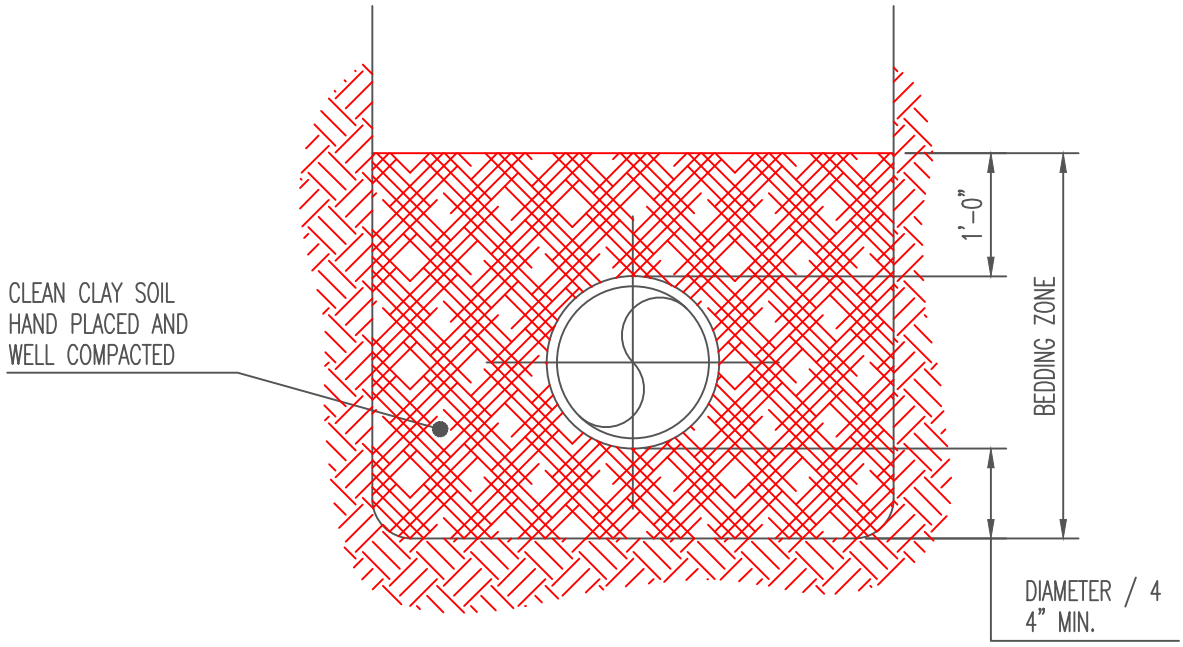

SECTION

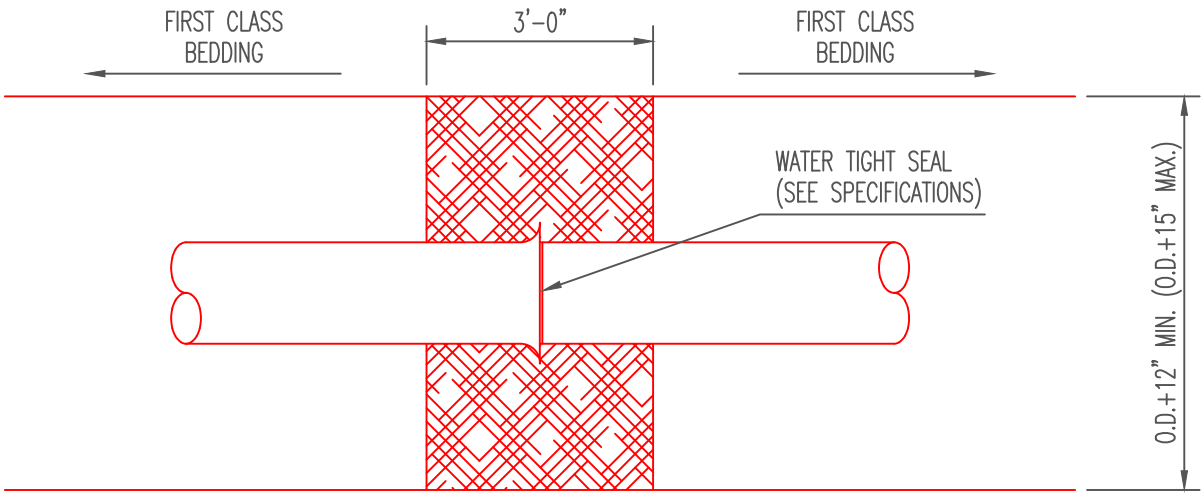

PLAN

NOTES:

1. CENTER CLAY DIKE OVER PIPE JOINT.
2. CONSTRUCT CLAY DIKE BETWEEN MANHOLES AT MAX. INTERVALS OF 20 L.F.
3. CONSTRUCT CLAY DIKE OF CLEAN CLAY SOIL FROM BOTTOM OF TRENCH TO A DEPTH OF ONE FOOT ABOVE TOP OF THE PIPE.

SCHREITER ENGINEERING ASSOCIATES
Engineers Planners Scientists
7 Raleigh Drive
Downingtown, PA.
19335-1107
Tel (610) 873-0520
Fax (610) 873-0520
Email KES1@AOL.COM

UPPER SAUCON TOWNSHIP			D5
NAME: CLAY DIKE			
DATE: 06/01/2014	REVISED:	REVISED:	
DRAWN: ACD	REVISED:	REVISED:	
SCALE: N.T.S.	CAD File Name: D3		No.

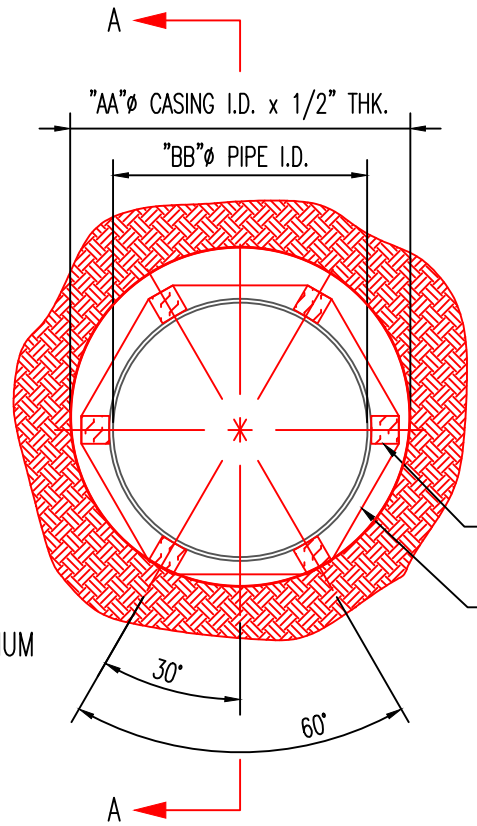

NOTE:
THE CASING PIPE SHALL HAVE A MINIMUM YIELD STRENGTH OF 35,000 P.S.I.

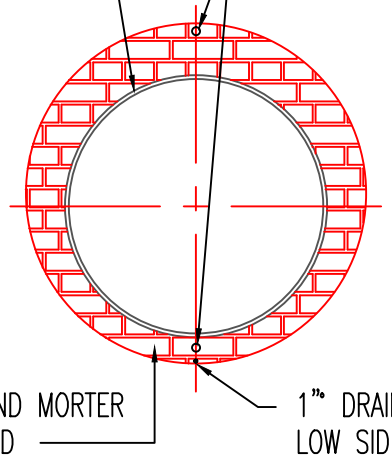

CASING END DETAIL

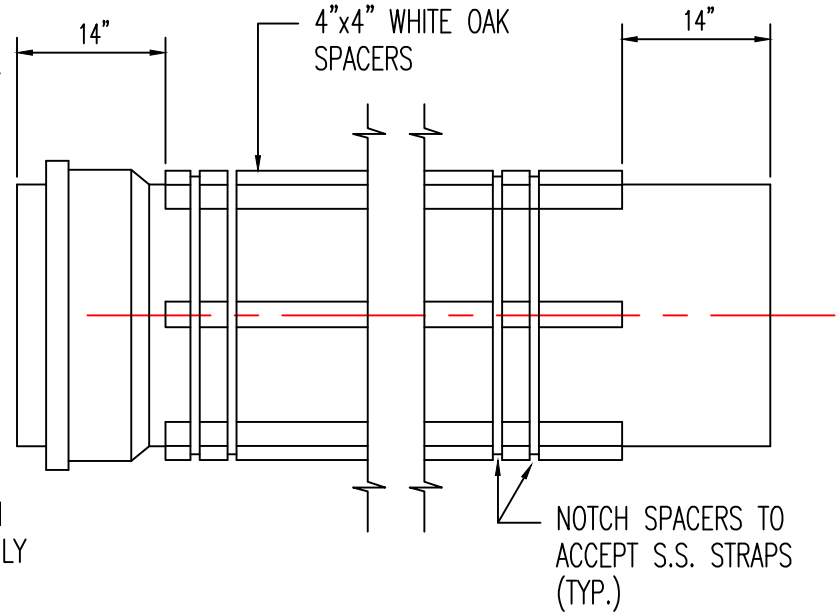

SECTION A–A

SCHREITER ENGINEERING ASSOCIATES
Engineers Planners Scientists
7 Raleigh Drive
Downingtown, PA.
19335-1107
Tel (610) 873-0520
Fax (610) 873-0520
Email KES1@AOL.COM

UPPER SAUCON TOWNSHIP

NAME:	PIPE CASING DETAILS AND NOTES		
DATE:	06/01/2014	REVISED:	REVISED:
DRAWN:	ACD	REVISED:	REVISED:
SCALE:	Not To Scale	CAD File Name: D14	

D6

No.

November 14, 1998 6:22:48 p.m. | Oper: acddevsys
Drawing: D013007.dwg

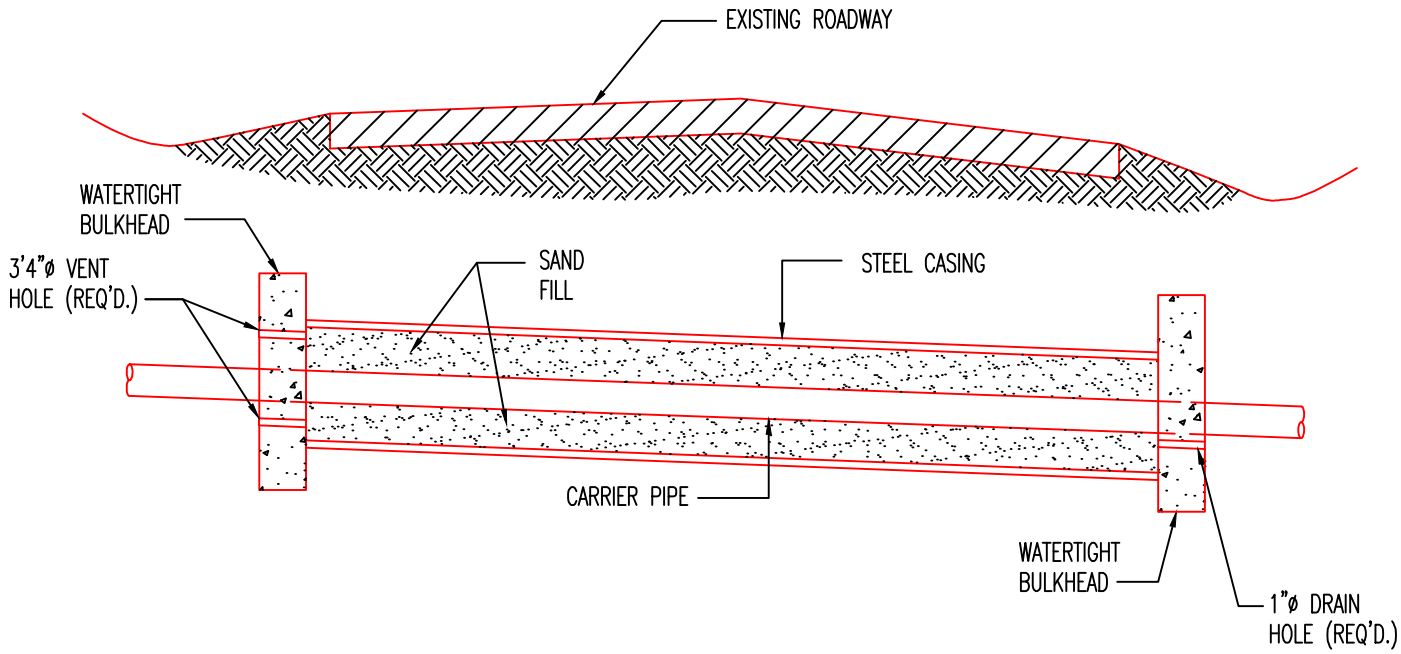

NOTES:

1. THE BORING AND RECEIVING PITS SHALL BE LOCATED OUTSIDE OF ROAD RIGHT-OF-WAY.
2. THE SIDES OF THE BORING AND RECEIVING PITS SHALL BE SHORED TO PREVENT CAVE IN.
3. CASING SHALL EXTEND TO EDGES OF ROAD RIGHT-OF-WAY.

SCHREITER ENGINEERING ASSOCIATES
Engineers Planners Scientists
7 Raleigh Drive
Downingtown, PA.
19335-1107
Tel (610) 873-0520
Fax (610) 873-0520
Email KES1@AOL.COM

UPPER SAUCON TOWNSHIP

NAME:	PIPE CROSSING ROAD DETAIL		
DATE:	06/01/2014	REVISED:	REVISED:
DRAWN:	ACD	REVISED:	REVISED:
SCALE:	NOT TO SCALE	CAD File Name: D15	

D7

No.

November 19, 1998 10:41:29 p.m. | Oper: acddevsys
Drawing: D18.dwg

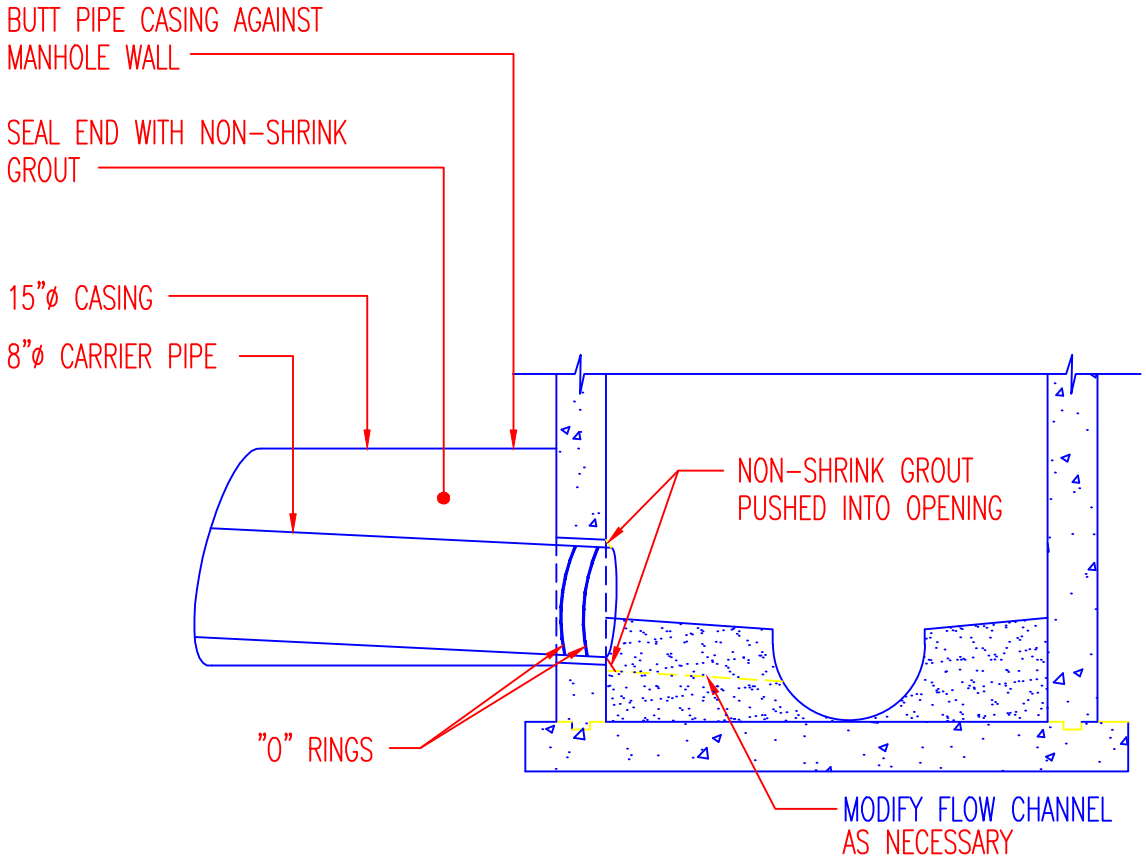

TYPICAL UNDERGROUND CONNECTION

SCALE: N.T.S.

NOTES:

1. TO BE USED WHEN PENNDOT OR TOWNSHIP DOES NOT ALLOW FOR EXCAVATION AT RECIEVING MANHOLE

2. ALL WORK TO BE COMPLETED FROM INSIDE OF MANHOLE.

3. CONTRACTOR WILL FOLLOW ALL CONFINED SPACE ENTRY REQUUIREMENTS.

SCHREITER ENGINEERING ASSOCIATES
Engineers Planners Scientists
7 Raleigh Drive
Downingtown, PA.
19335-1107
Tel (610) 873-0520
Fax (610) 873-0520
Email KES1@AOL.COM

NAME:	UPPER SAUCON TOWNSHIP ROAD CROSSING DETAL CONNECTION TO EXISTING MANHOLE W/O EXCAVATION		D 8
DATE: 06/01/2014	REVISED:	REVISED:	
DRAWN: ACD	REVISED:	REVISED:	
SCALE: AS NOTED	CAD File Name:		No.

December 10, 1999 11:50:09 a.m. | Oper: gcarr
Drawing: mh79.dwg

NOTE:

1. FOR POURED BASE REINFORCEMENT REFER TO PLATE No. DD5

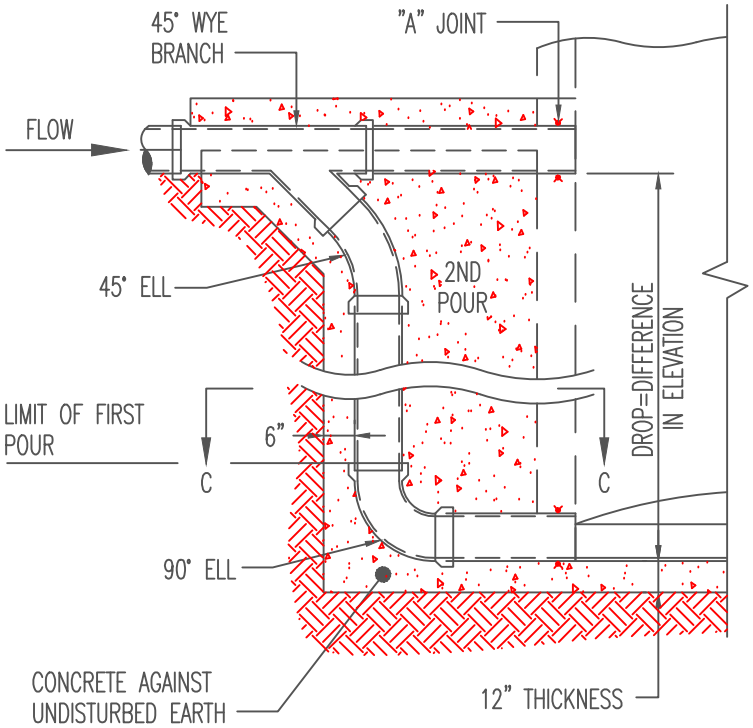

TYPE A

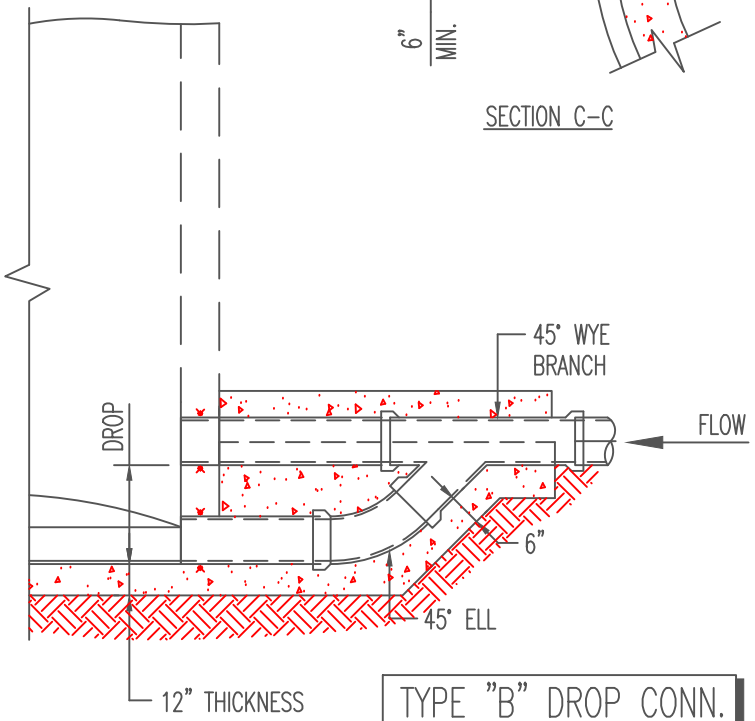

TYPE B

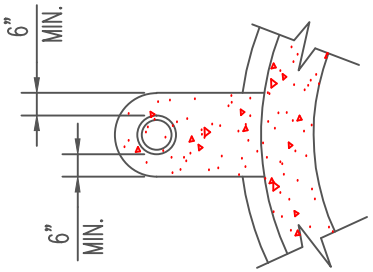

SECTION C-C

TYPE "B" DROP CONN. MAX. DROP	
8"SEWER	3'-6"
10"SEWER	3'-9"
12"SEWER	4'-6"
15"SEWER	4'-6"

SCHREITER ENGINEERING ASSOCIATES
Engineers Planners Scientists
7 Raleigh Drive
Downingtown, PA.
19335-1107
Tel (610) 873-0820
Fax (610) 873-0820
Email KES1@AOL.COM

UPPER SAUCON TOWNSHIP
DROP MANHOLE
PVC PIPE INSTALLATION

NAME:			
DATE: 06/01/2014	REVISED:	REVISED:	
DRAWN: ACD	REVISED:	REVISED:	
SCALE: N.T.S.	CAD File Name: DD1		No.

DD1

NOTE:

1. IN LIEU OF BELLS, PROVIDE MECHANICAL JOINTS WHERE D.I. PIPE IS SPECIFIED

2. FOR POURED BASE REINFORCEMENT REFER TO PLATE No. DD5

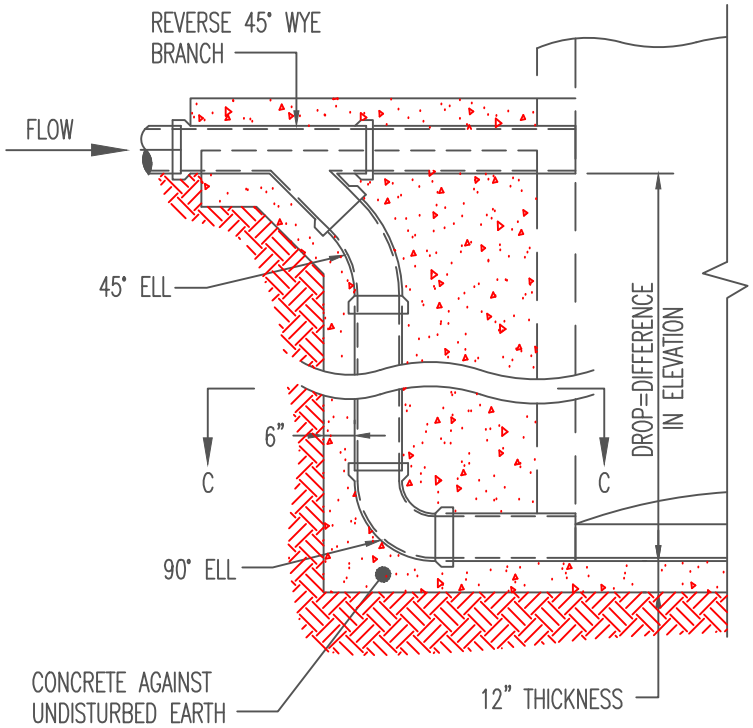

TYPE A

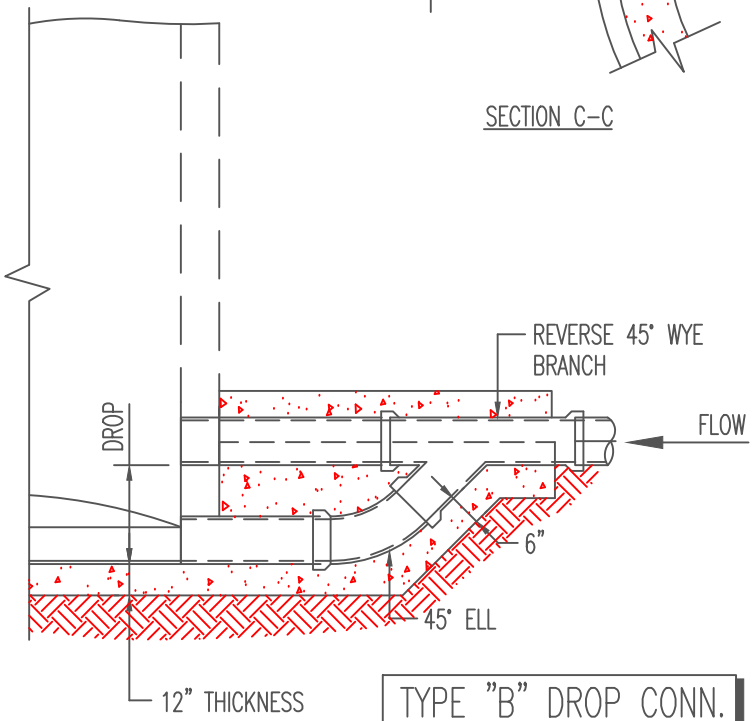

TYPE B

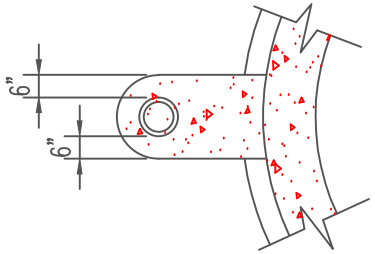

SECTION C-C

TYPE "B" DROP CONN. MAX. DROP	
8"SEWER	3'-6"
10"SEWER	3'-9"
12"SEWER	4'-6"
15"SEWER	4'-6"

SCHREITER ENGINEERING ASSOCIATES
Engineers Planners Scientists
7 Raleigh Drive
Downingtown, PA.
19335-1107
Tel (610) 873-0320
Fax (610) 873-0320
Email KES1@AOL.COM

UPPER SAUCON TOWNSHIP
DROP MANHOLE
ALL PIPE EXCEPT PVC

NAME:
DATE: 06/01/2014
DRAWN: ACD
SCALE: N.T.S.
REVISED:
REVISED:
REVISED:
REVISED:
CAD File Name: DD2
No.

DD2

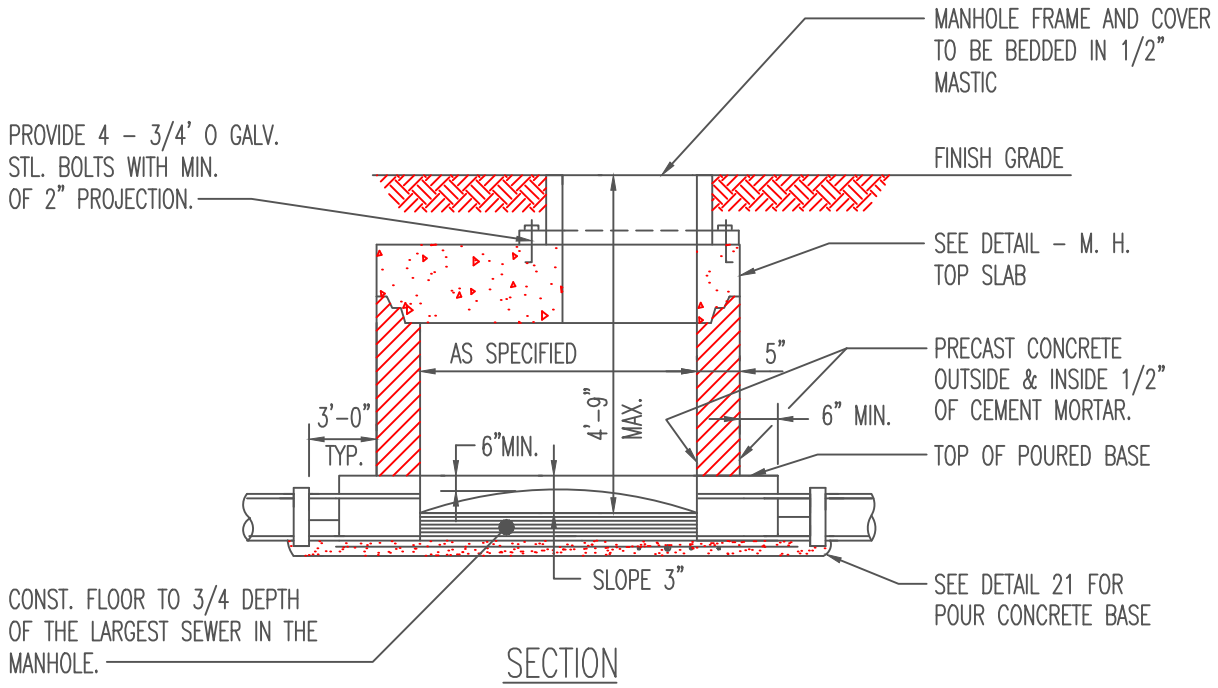

SECTION

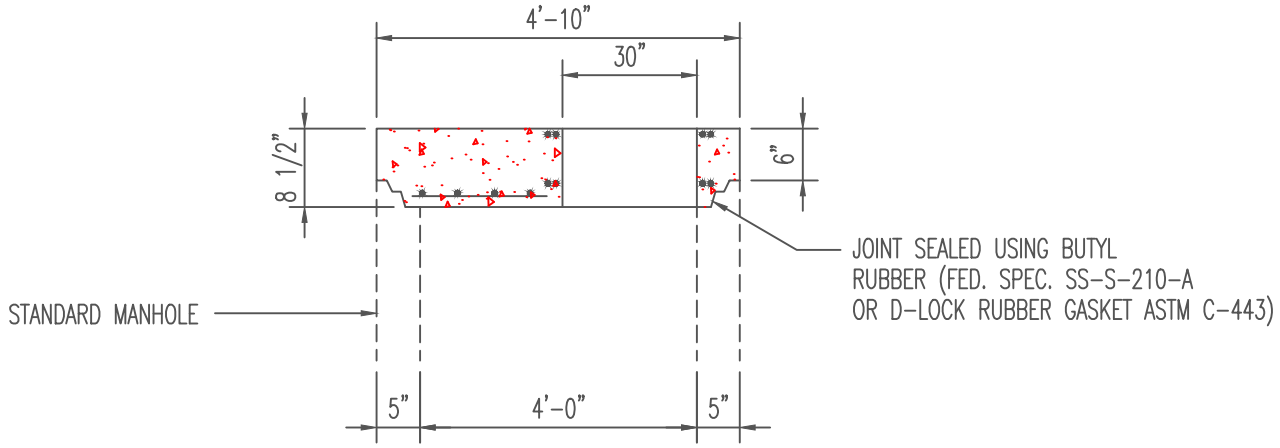

DETAIL – M.H. TOP SLAB

MANHOLE CAN ONLY BE USED WITH APPROVAL OF USTMA ENGINEER

MANHOLE DESIGN SHALL CONFORM YO C478 LATEST VERSION

SCHREITER ENGINEERING ASSOCIATES
Engineers Planners Scientists
7 Raleigh Drive
Downingtown, PA.
19335–1107
Tel (610) 873–0520
Fax (610) 873–0520
Email KES1@AOL.COM

UPPER SAUCON TOWNSHIP
TYPICAL SHALLOW MANHOLE

NAME:			
DATE: 06/01/2014	REVISED:	REVISED:	
DRAWN: ACD	REVISED:	REVISED:	
SCALE: N.T.S.	CAD File Name: DD3		No.

DD3

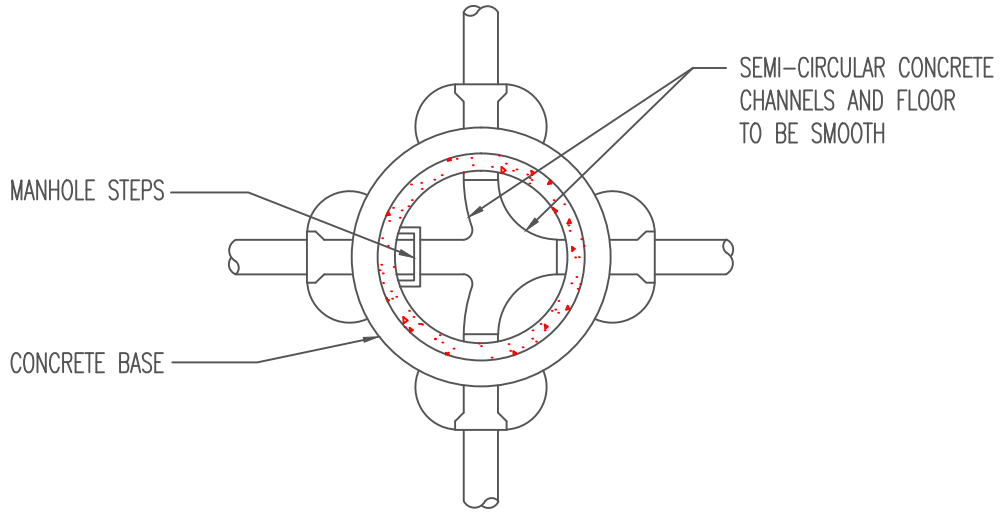

PLAN

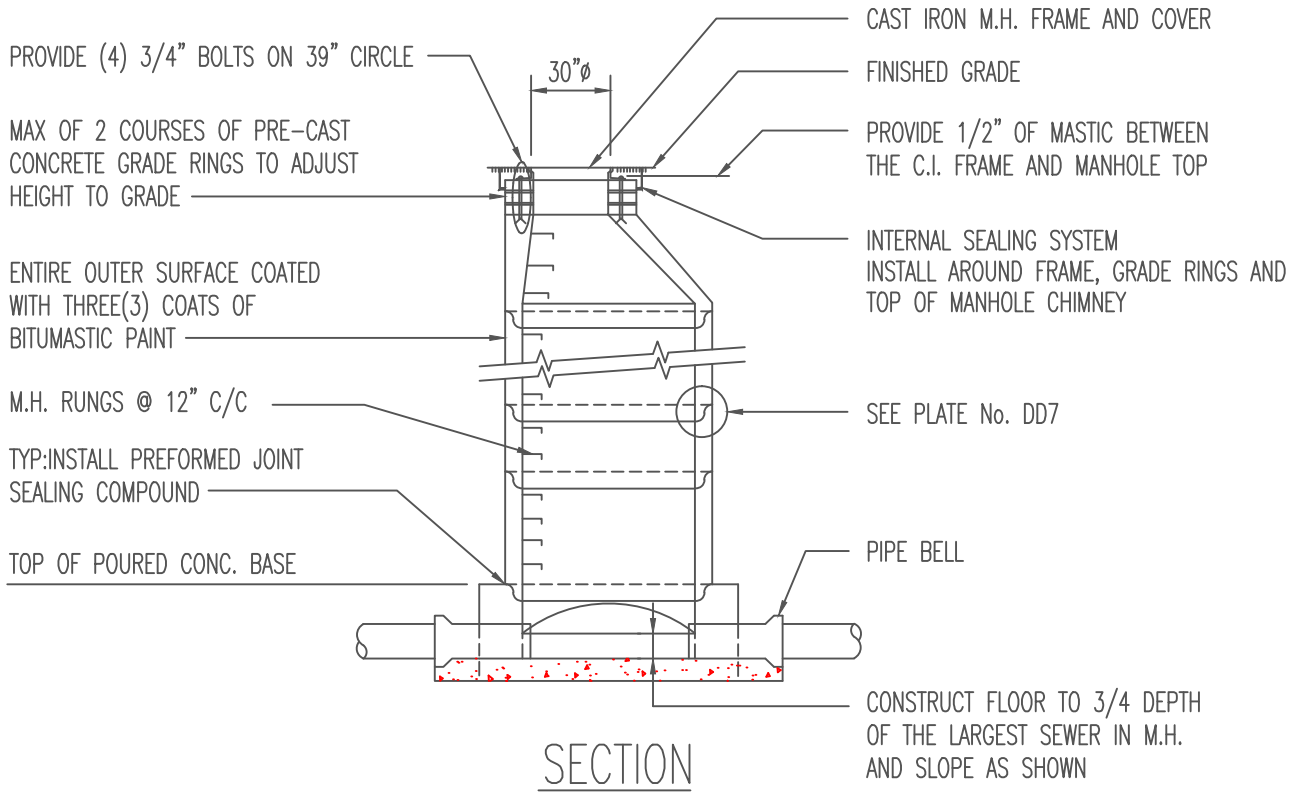

SECTION

NOTES:

1. STEEL TEMPLATE TO BE SUPPLIED BY MANHOLE MFR. IN ORDER TO FORM PROPER RECESS IN CONCRETE.

2. PROVIDE POURED BASE ONLY WHEN CONNECTING TO EXISTING PIPE, OTHERWISE PROVIDE PRE-CAST BASE.

3. FOR POURED BASE REINFORCEMENT, REFER TO PLATE No.DD5

SCHREITER ENGINEERING ASSOCIATES
Engineers Planners Scientists
7 Raleigh Drive
Downingtown, PA.
19335-1107
Tel (610) 873-0520
Fax (610) 873-0520
Email KES1@AOL.COM

NAME:	UPPER SAUCON TOWNSHIP PRE-CAST MANHOLES WITH CONCRETE BASE		DD4
DATE: 06/01/2014	REVISED: 3/19/07	REVISED:	
DRAWN: ACD	REVISED:	REVISED:	
SCALE: N.T.S.	CAD File Name: DD4		No.

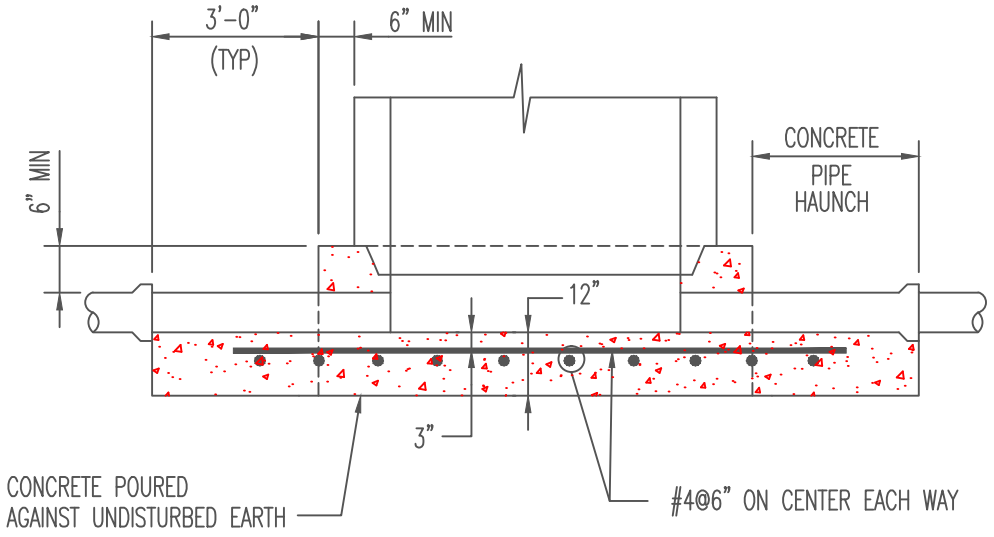

NOTE:

1. REFER TO PLATE No. 1 FOR ADDITIONAL DETAILS
2. CONCRETE TO BE CLASS B

SCHREITER ENGINEERING ASSOCIATES
Engineers Planners Scientists
7 Raleigh Drive
Downingtown, PA.
19335-1107
Tel (610) 873-0520
Fax (610) 873-0520
Email KES1@AOL.COM

NAME:	UPPER SAUCON TOWNSHIP POURED CONCRETE BASE		DD5
DATE: 06/01/2014	REVISED:	REVISED:	
DRAWN: ACD	REVISED:	REVISED:	
SCALE: N.T.S.	CAD File Name: DD5		No.

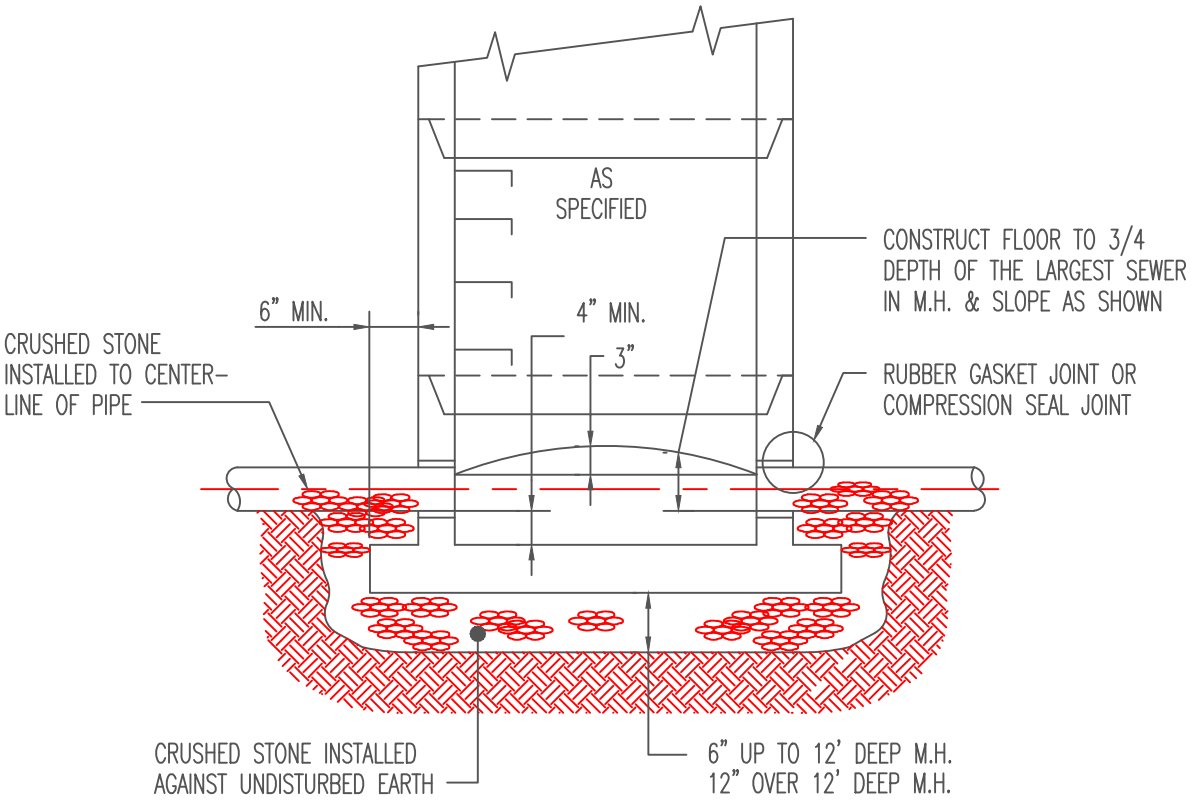

SCHREITER ENGINEERING ASSOCIATES
Engineers Planners Scientists
7 Raleigh Drive
Downingtown, PA.
19335-1107
Tel (610) 873-0520
Fax (610) 873-0520
Email KES1@AOL.COM

UPPER SAUCON TOWNSHIP
PRE-CAST MANHOLE BASE

NAME:			
DATE: 06/01/2014	REVISED:	REVISED:	
DRAWN: ACD	REVISED:	REVISED:	
SCALE: N.T.S.	CAD File Name: DD6		No.

DD6

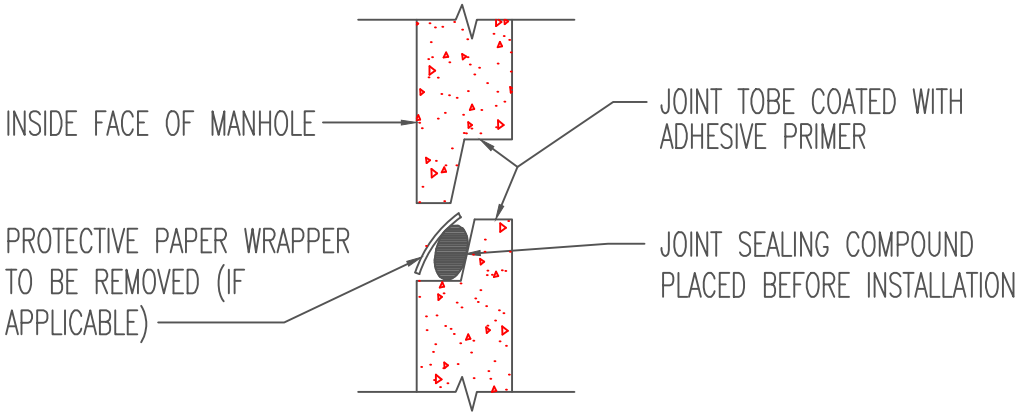

OPEN JOINT

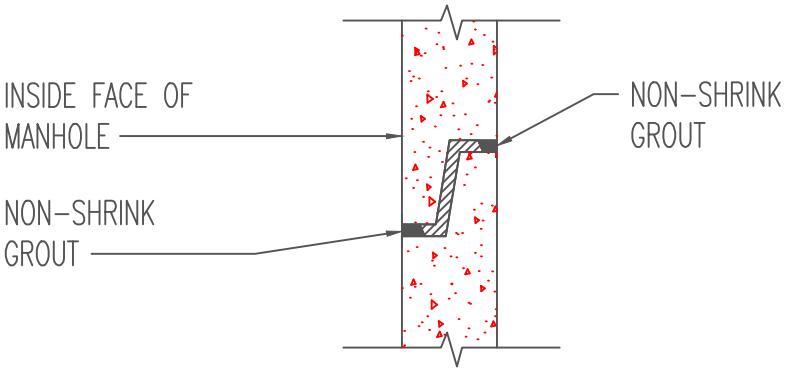

CLOSED JOINT

SCHREITER ENGINEERING ASSOCIATES
Engineers Planners Scientists
7 Raleigh Drive
Downingtown, PA.
19335-1107
Tel (610) 873-0520
Fax (610) 873-0520
Email KES1@AOL.COM

NAME:	UPPER SAUCON TOWNSHIP PRE-CAST MANHOLE JOINTS AND TRANSITION DETAILS		DD7
DATE:	06/01/2014	REVISED:	REVISED:
DRAWN:	ACD	REVISED:	REVISED:
SCALE:	N.T.S.	CAD File Name: DD7	No.

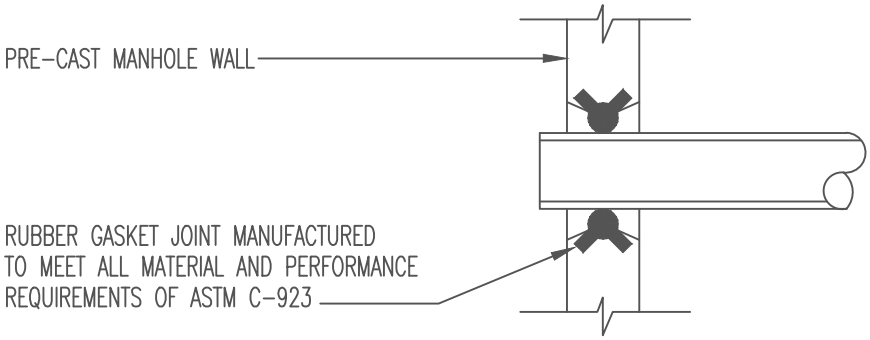

TYPE "A" JOINT

JOINT DETAILS

SCHREITER ENGINEERING ASSOCIATES
Engineers Planners Scientists
7 Raleigh Drive
Downingtown, PA.
19335-1107
Tel (610) 873-0520
Fax (610) 873-0520
Email KES1@AOL.COM

UPPER SAUCON TOWNSHIP

NAME:			
DATE: 06/01/2014	REVISED:	REVISED:	
DRAWN: ACD	REVISED:	REVISED:	
SCALE: N.T.S.	CAD File Name: DD8		

DD8

No.

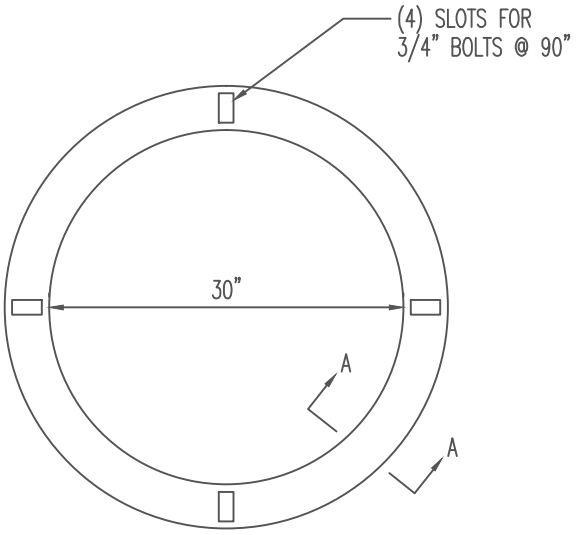

PLAN VIEW

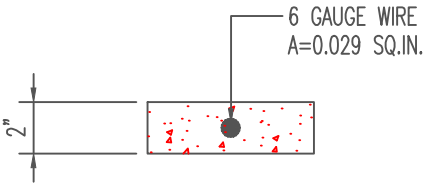

SECTION A-A

SCALE: N.T.S.

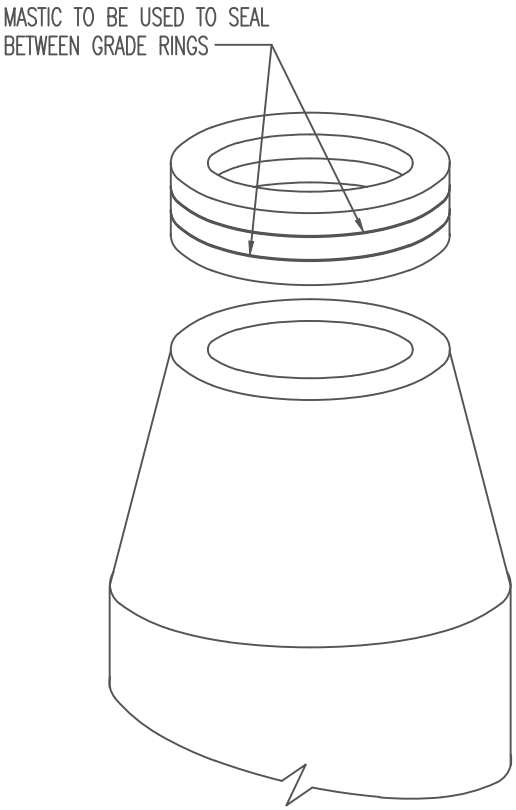

NOTES

1.) CONCRETE IS DESIGNED TO OBTAIN A STRENGTH OF 4000 PSI IN 28 DAYS.

2.) DESIGN MEETS REQUIREMENTS OF A.S.T.M. STANDARD C-478

3.) WEIGHT OF ONE PIECE: 30" DIAM. - 330 LBS.

SCHREITER ENGINEERING ASSOCIATES
Engineers Planners Scientists
7 Raleigh Drive
Downingtown, PA.
19335-1107
Tel (610) 873-0520
Fax (610) 873-0520
Email KES1@AOL.COM

UPPER SAUCON TOWNSHIP

NAME:	STANDARD MANHOLE GRADE RING		
DATE:	06/01/2014	REVISED:	REVISED:
DRAWN:	ACD	REVISED:	REVISED:
SCALE:	1"=1'-0"	CAD File Name: DD9	

DD9

No.

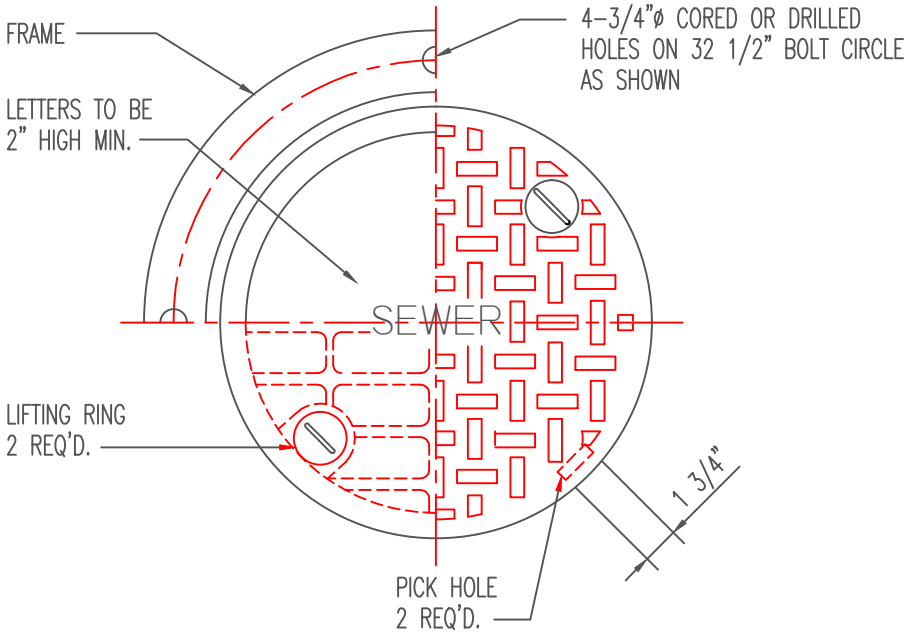

PLAN

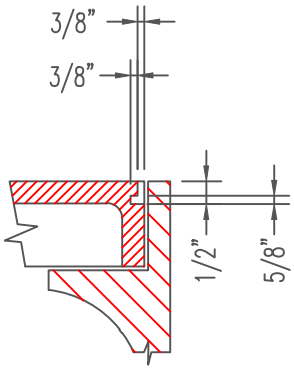

DETAIL OF PICK HOLE

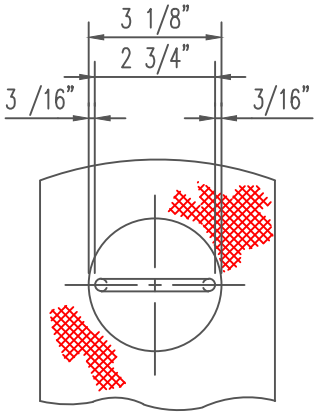

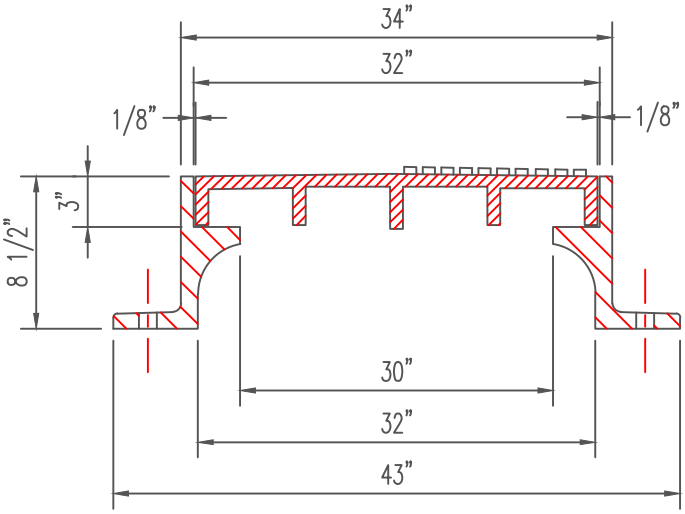

SECTION

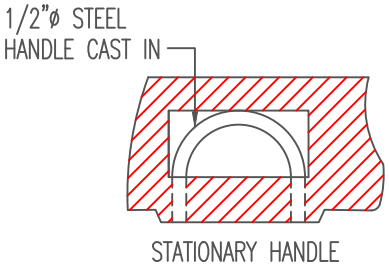

DETAIL OF LIFT RING

APPROXIMATE WEIGHT 600#

SCHREITER ENGINEERING ASSOCIATES
Engineers Planners Scientists
7 Raleigh Drive
Downingtown, PA.
19335-1107
Tel (610) 873-0520
Fax (610) 873-0520
Email KES1@AOL.COM

NAME:	UPPER SAUCON TOWNSHIP 30" CAST IRON MANHOLE FRAME AND COVER		DD10
DATE: 06/01/2014	REVISED:	REVISED:	
DRAWN: ACD	REVISED:	REVISED:	
SCALE: N.T.S.	CAD File Name: DD10		No.

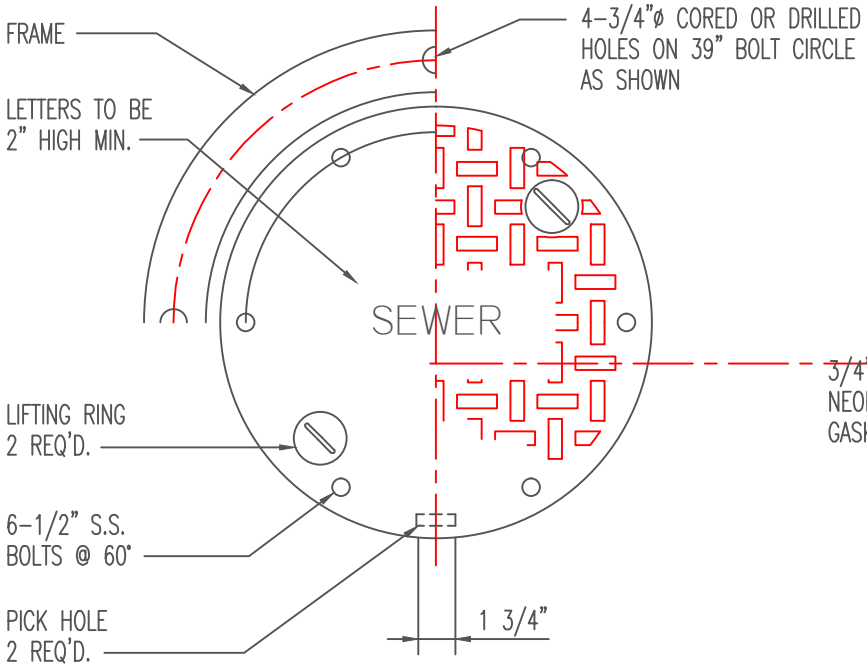

PLAN

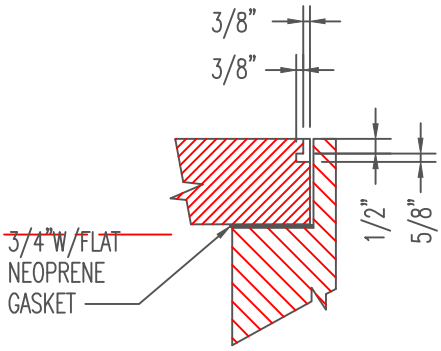

DETAIL OF PICK HOLE

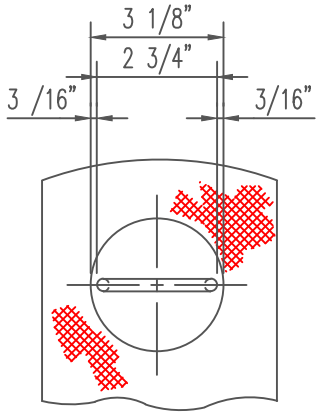

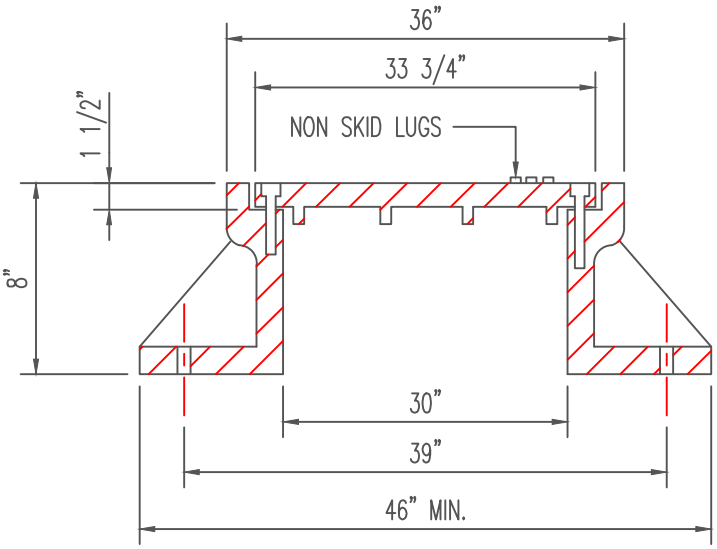

SECTION

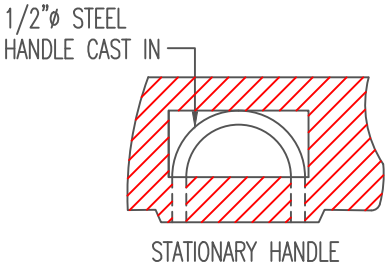

DETAIL OF LIFT RING

CASTING TO BE SUPPLIED WITH BOLTED COVER
AND MACHINED BEARING SURFACE
APPROXIMATE WEIGHT 600#

SCHREITER ENGINEERING ASSOCIATES
Engineers Planners Scientists
7 Raleigh Drive
Downingtown, PA.
19335-1107
Tel (610) 873-0520
Fax (610) 873-0520
Email KES1@AOL.COM

NAME:	UPPER SAUCON TOWNSHIP CAST IRON WATERTIGHT MANHOLE FRAME AND COVER		DD11
DATE: 06/01/2014	REVISED:	REVISED:	
DRAWN: ACD	REVISED:	REVISED:	
SCALE: N.T.S.	CAD File Name: DD11		No.

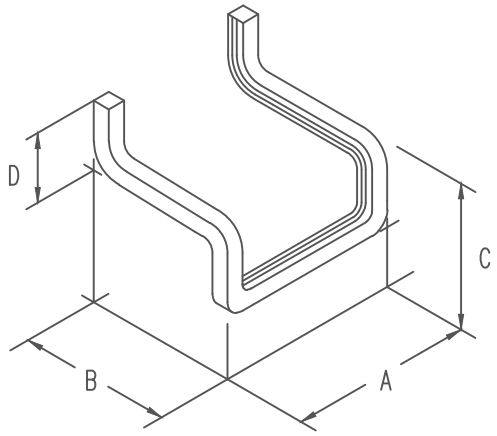

CAST IN PLACE WALLS

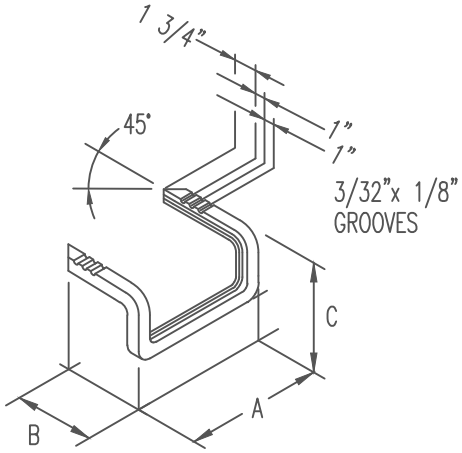

PRECAST MANHOLES

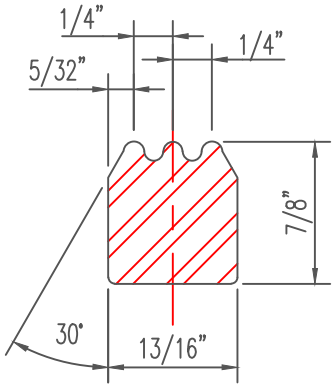

TYPICAL CROSS SECT.
ON ALL STEPS

APPLICATION	DIMENSION (IN.)			
	A	B	C	D
CAST IN PLACE WALLS	17 3/4	13 13/16	3 3/4	2
PRECAST MANHOLES	* 13 3/4	11	3 3/4	——

* MIN. 12" AND MUST MEET THE REQUIREMENTS OF ASTM C-478 SPECIFICATIONS

SCHREITER ENGINEERING ASSOCIATES
Engineers Planners Scientists
7 Raleigh Drive
Downingtown, PA.
19335-1107
Tel (610) 873-0520
Fax (610) 873-0520
Email KES1@AOL.COM

UPPER SAUCON TOWNSHIP

NAME: DROP FRONT MANHOLE STEP

DATE:	06/01/2014	REVISED:	REVISED:
DRAWN:	ACD	REVISED:	REVISED:
SCALE:	N.T.S.	CAD File Name: DD12	

DD12

No.

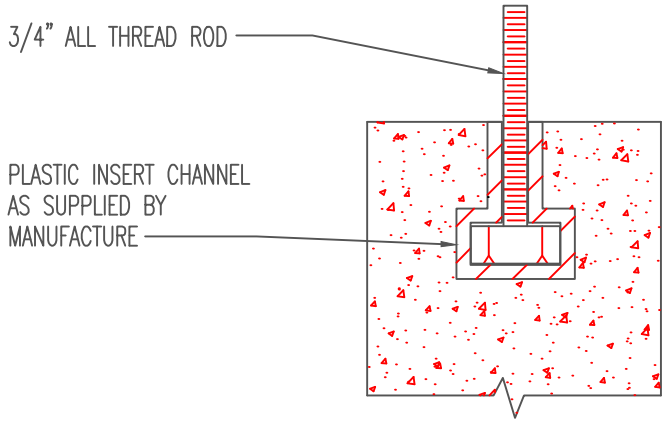

ROTATED SECTION
ILLUSTRATING BOLT SLOT

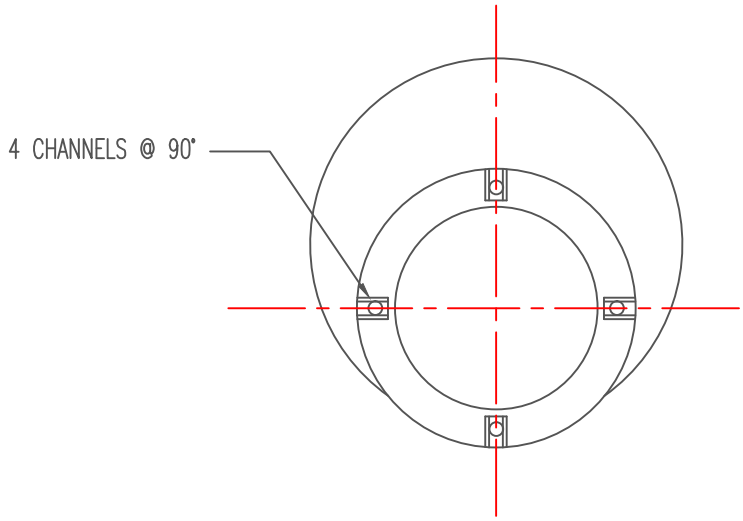

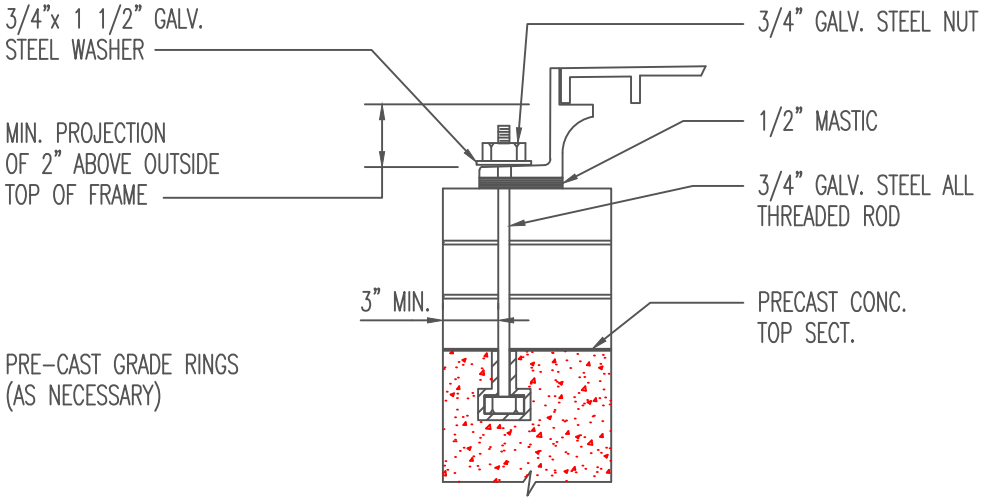

NOTE:

4REQ'D. PER MANHOLE

SCHREITER ENGINEERING ASSOCIATES
Engineers Planners Scientists
7 Raleigh Drive
Downingtown, PA.
19335-1107
Tel (610) 873-0520
Fax (610) 873-0520
Email KES1@AOL.COM

UPPER SAUCON TOWNSHIP			DD13
NAME: ANCHOR BOLT DETAIL			
DATE: 06/01/2014	REVISED:	REVISED:	
DRAWN: ACD	REVISED:	REVISED:	
SCALE: N.T.S.	CAD File Name: DD13		No.

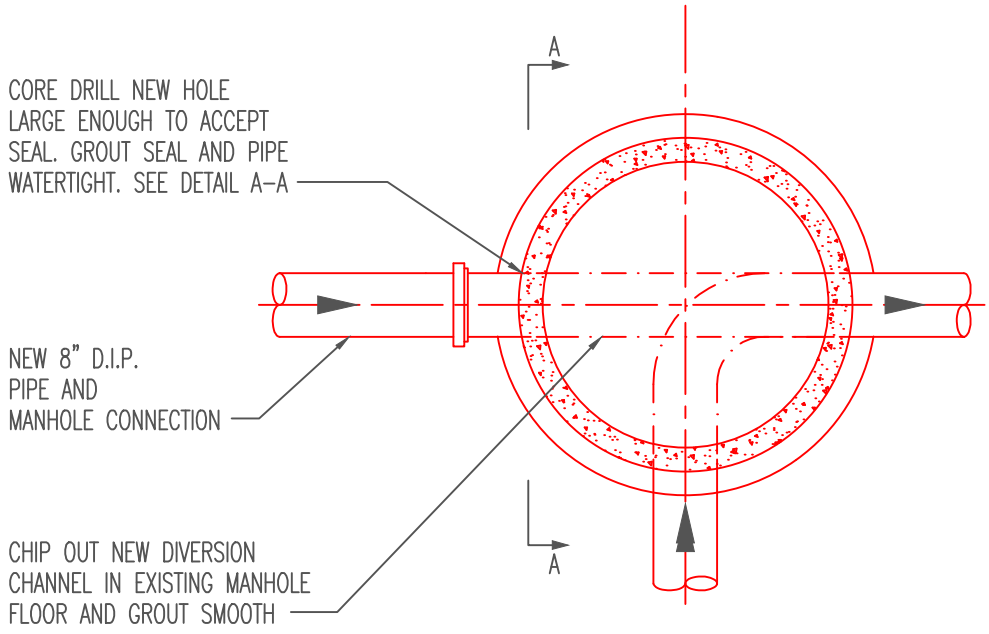

PLAN

NOT TO SCALE

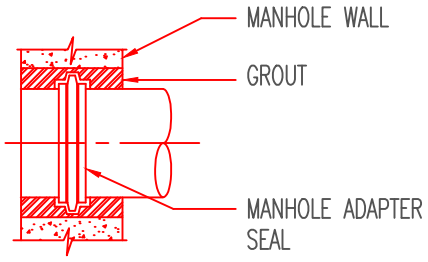

SECTION A-A

NOT TO SCALE

SCHREITER ENGINEERING ASSOCIATES
Engineers Planners Scientists
7 Raleigh Drive
Downingtown, PA.
19335-1107
Tel (610) 873-0520
Fax (610) 873-0520
Email KES1@AOL.COM

NAME:	UPPER SAUCON TOWNSHIP TYPICAL CONNECTION TO EXISTING MANHOLE		DD14
DATE: 06/01/2014	REVISED:	REVISED:	
DRAWN: ACD	REVISED:	REVISED:	
SCALE: 1/8"=1'-0"	CAD File Name: D3		No.

October 06, 2000 2:34:45 p.m. | Oper: gcarr
Drawing: D013-036.dwg

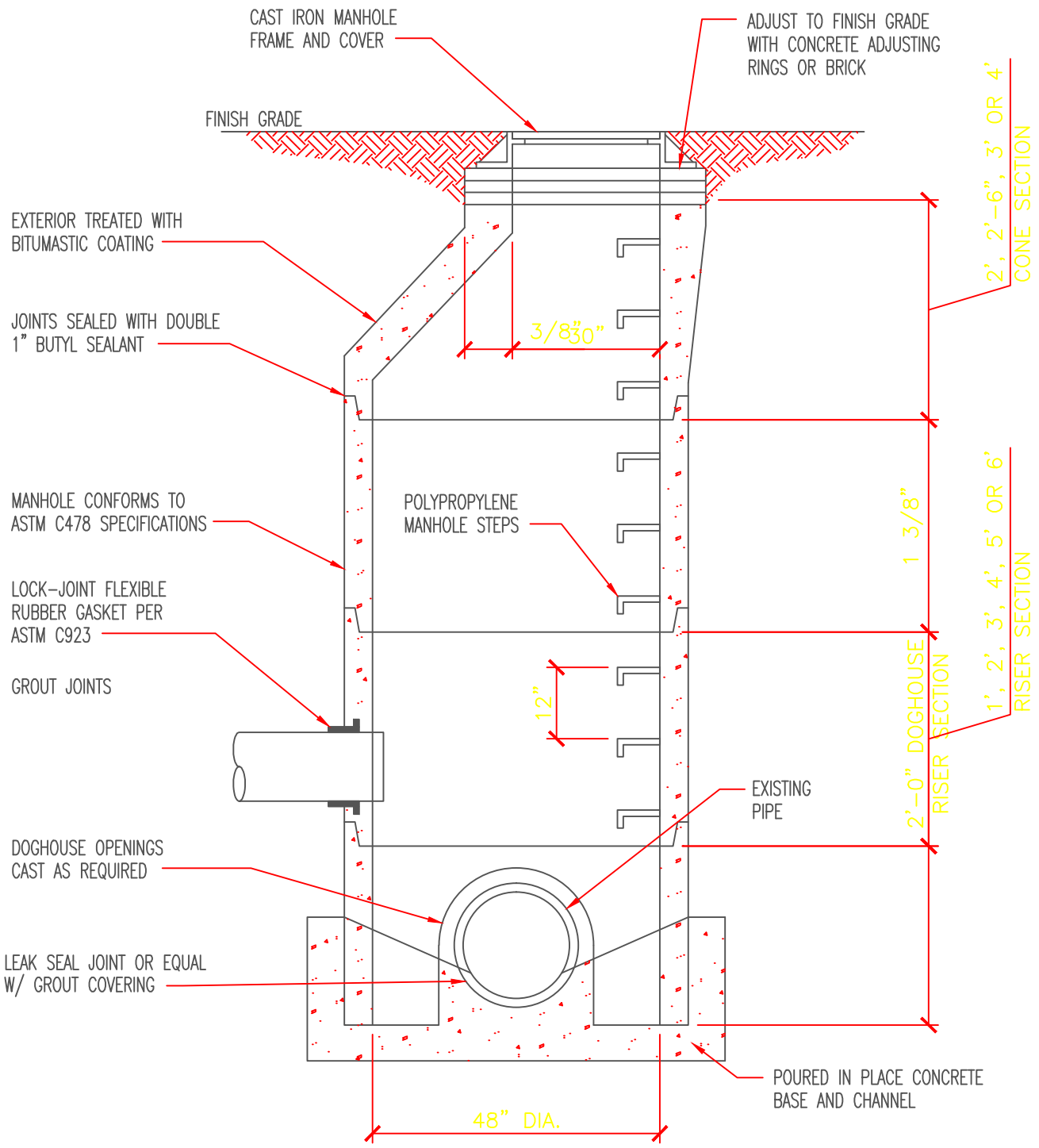

NOTES:
1. CHANNEL TO BE CONSTRUCTED AND FINISHED AFTER CONCRETE IS POURED. ALL EDGES TO BE SMOOTH FINISHED.
2. BASE TO BE INSTALLED ON UNDISTURBED OR COMPACTED CONTROLLED FILL, AS REQUIRED BY ENGINEER.

SCHREITER ENGINEERING ASSOCIATES
Engineers Planners Scientists
7 Raleigh Drive
Downingtown, PA.
19335-1107
Tel (610) 873-0520
Fax (610) 873-0520
Email KES1@AOL.COM

UPPER SAUCON TOWNSHIP
DOGHOUSE MANHOLE

NAME:			
DATE: 06/01/2014	REVISED:	REVISED:	
DRAWN: ACD	REVISED:	REVISED:	
SCALE: N.T.S.	CAD File Name: D013-036		

DD 15

No.

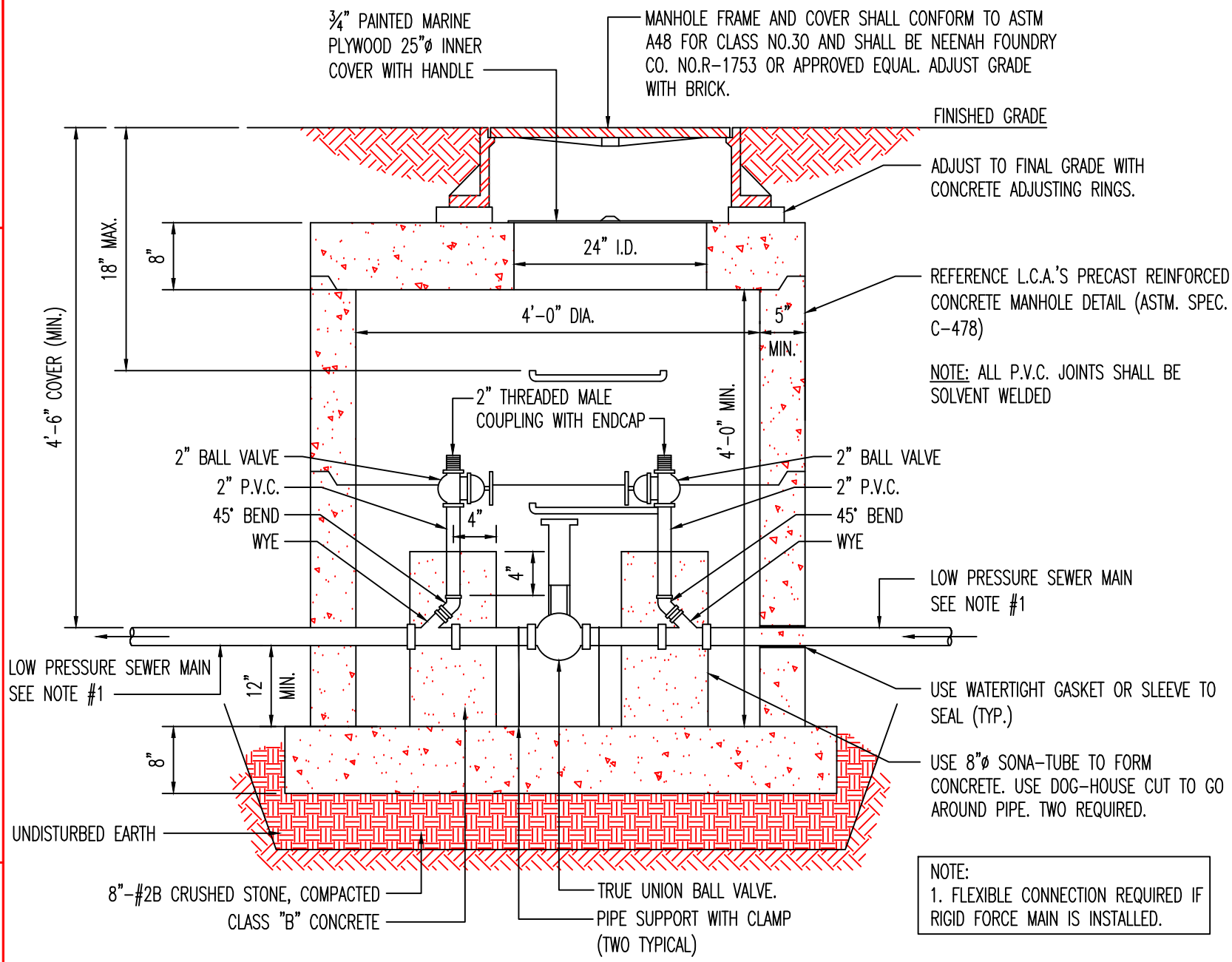

NOTE:
1. FLEXIBLE CONNECTION REQUIRED IF RIGID FORCE MAIN IS INSTALLED.

INTERMEDIATE CLEANOUT, ACCESS, FLUSHING MANHOLE

N.T.S.

SCHREITER ENGINEERING ASSOCIATES
Engineers Planners Scientists
7 Raleigh Drive
Downingtown, PA.
19335-1107
Tel (610) 873-0520
Fax (610) 873-0520
Email KES1@AOL.COM

UPPER SAUCON TOWNSHIP MUNICIPAL AUTHORITY

NAME: LOW PRESSURE SEWER FLUSHING MANHOLE

DATE: 06/01/2014 | REVISED: | REVISED:

DRAWN: GTC | REVISED: | REVISED:

SCALE: N.T.S. | CAD File Name: DET-0310

No. DD16

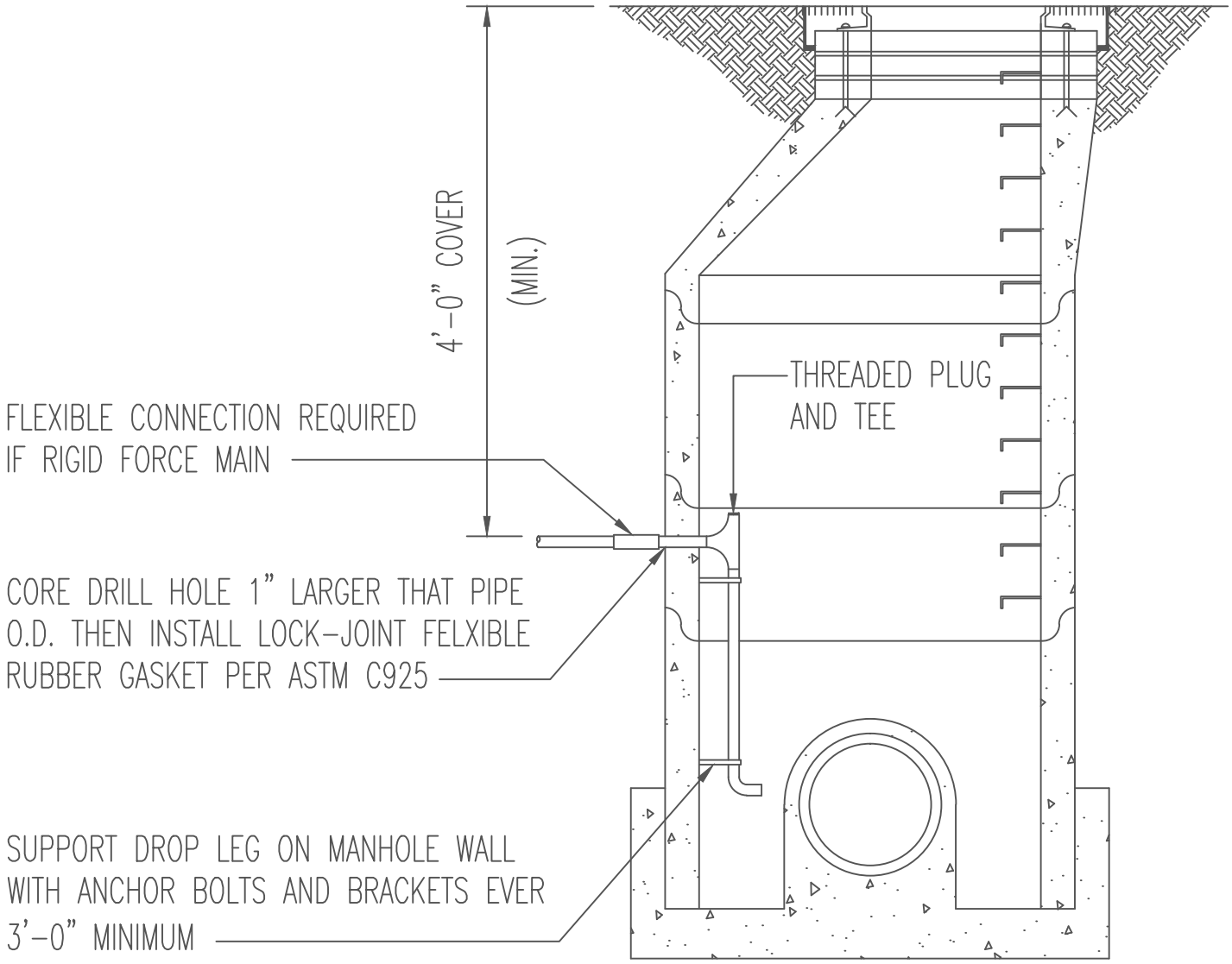

Note: All brackets and mounting bolts shall be stainless steel.

Note: Flow channel must be provided for discharge of force main in bench area of manhole.

SCHREITER ENGINEERING ASSOCIATES
Engineers Planners Scientists
7 Raleigh Drive
Downingtown, PA.
19335-1107
Tel (610) 873-0520
Fax (610) 873-0520
Email KES1@AOL.COM

NAME:	UPPER SAUCON TOWNSHIP LOW PRESSURE FORCE MAIN CONNECTION TO MANHOLE DETAIL		DD17
DATE: 06/01/2014	REVISED: 4/14/10	REVISED:	
DRAWN: GTC	REVISED:	REVISED:	
SCALE: N.T.S.	CAD File Name: DD17		No.

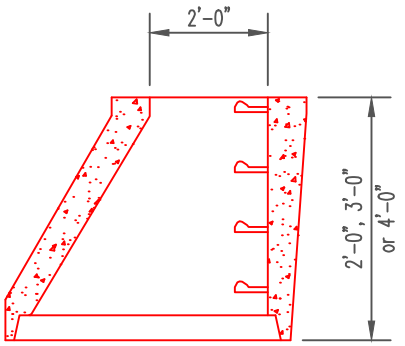

CONE

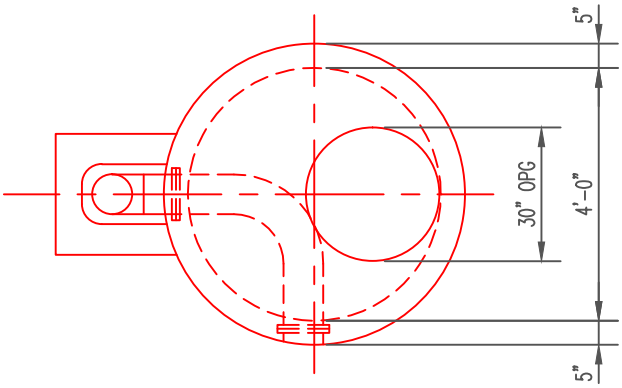

PLAN VIEW

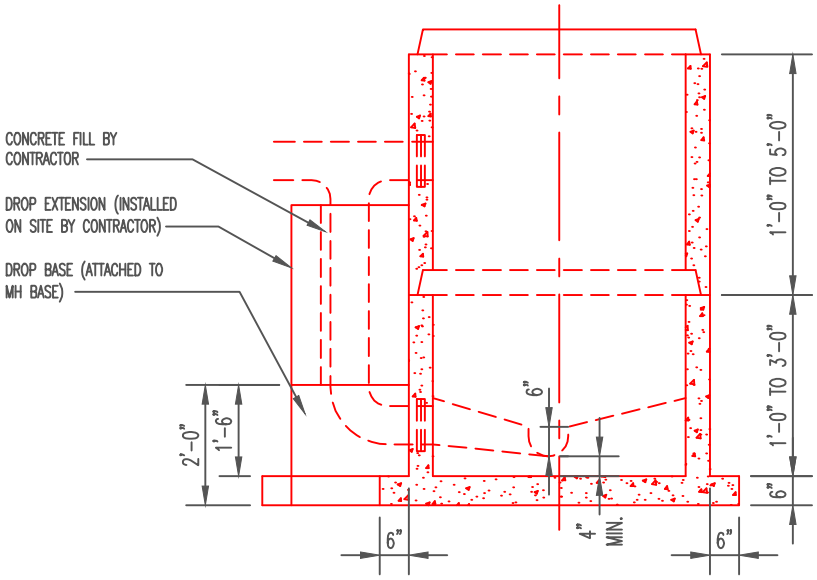

SECTION VIEW

SCHREITER ENGINEERING ASSOCIATES
Engineers Planners Scientists
7 Raleigh Drive
Downingtown, PA.
19335-1107
Tel (610) 873-0520
Fax (610) 873-0520
Email KES1@AOL.COM

NAME:	UPPER SAUCON TOWNSHIP DROP MANHOLE USING PRECAST COLLARS		DD18
DATE: 03/01/2014	REVISED:	REVISED:	
DRAWN: GTC	REVISED:	REVISED:	
SCALE: N.T.S.	CAD File Name: DX13		No.

Drawing: DX8

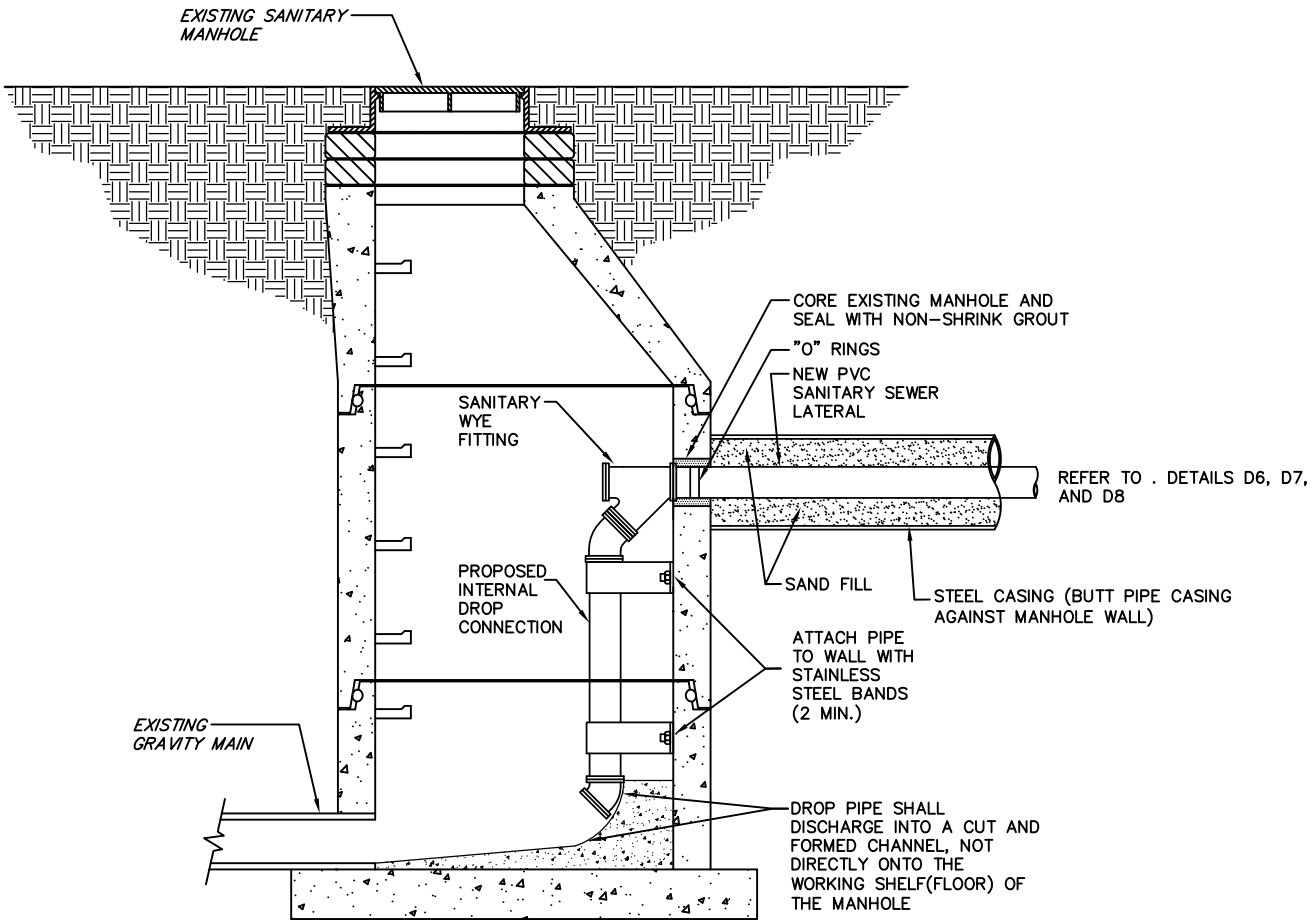

N.T.S.

THIS DETAIL CAN ONLY BE I MPLEMENTED FOR THOSE APPLICATIONS AS APPROVED IN WRITNG BY THE AUTHORITY ENGINEER

SCHREITER ENGINEERING ASSOCIATES
Engineers Planners Scientists

7 Raleigh Drive
Downingtown, PA.
19335-1107

Tel (610) 873-0520
Fax (610) 873-0520
Email KES1@AOL.COM

NAME:	UPPER SAUCON TOWNSHIP CONNECTION TO EXISTING MANHOLE W/O EXCAVATION AROUND MANHOLE		DD19
DATE: 06/01/2014	REVISED:	REVISED:	
DRAWN: ACD	REVISED:	REVISED:	
SCALE: N.T.S.	CAD File Name: DD11		No.

September 17, 2005 10:16:37 a.m. | Oper: GTC
ACD Drawing Name: Dx1r1.dwg

SCHREITER ENGINEERING ASSOCIATES
Engineers Planners Scientists
7 Raleigh Drive
Downingtown, PA.
19335-1107
Tel (610) 873-0520
Fax (610) 873-0520
Email KES1@AOL.COM

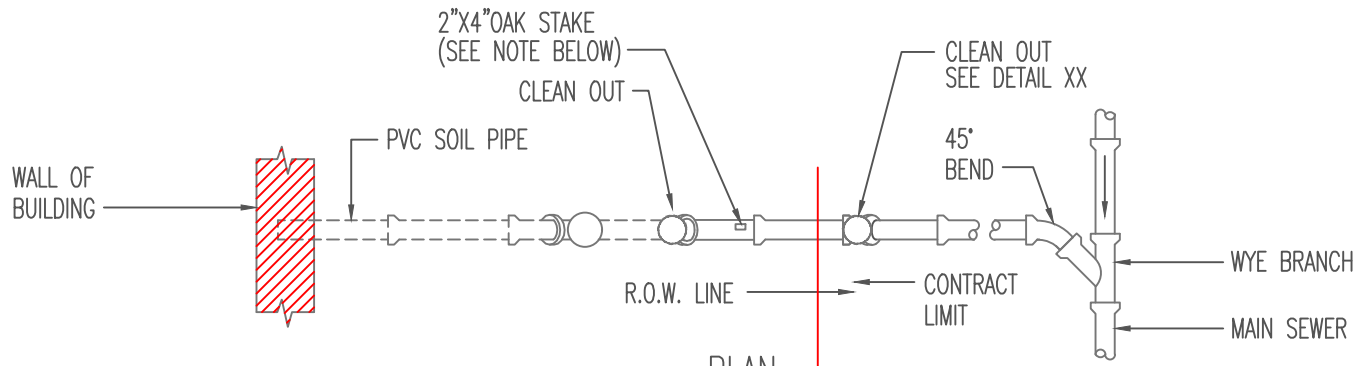

PLAN

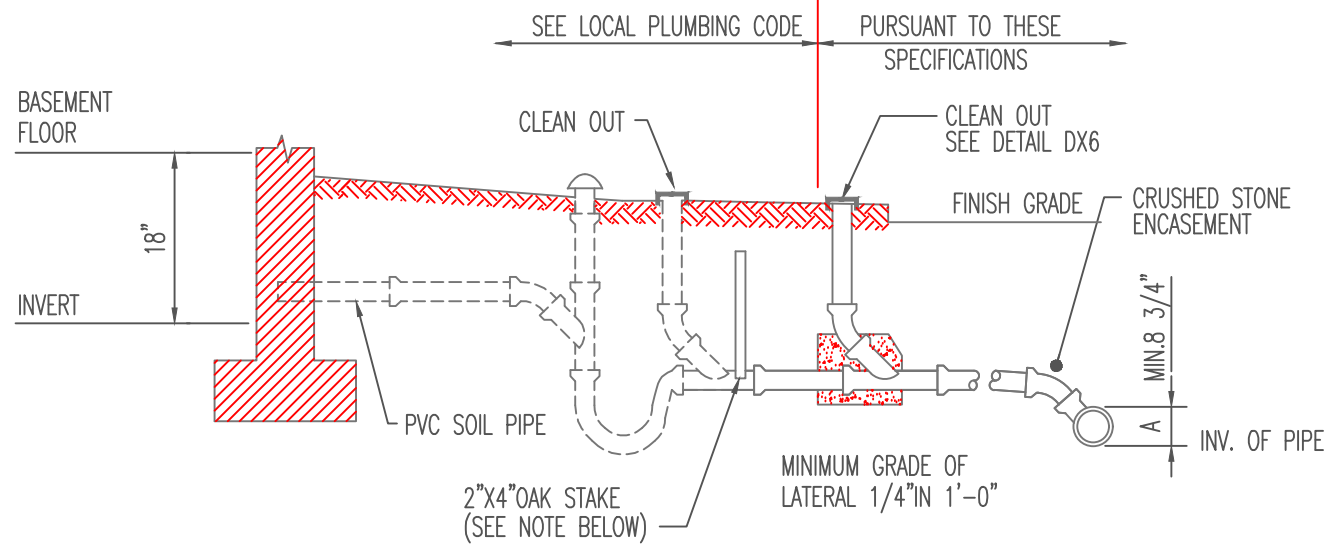

ELEVATION

MINIMUM DISTANCE "A"

8" SEWER	8 3/4"
10" SEWER	10 1/4"
12" SEWER	12"
15" SEWER	14 3/4"
18" SEWER	17 1/2"

NOTE:

THE CONTRACTOR WILL MARK THE END OF ALL LATERALS WITH A 2x4 OAK STAKE, THE TOP TO REMAIN ±12" ABOVE FINISH GRADE. (NEW CONSTRUCTION ONLY)

ALL LATERAL PIPING SHALL MEET REQUIEMENTS SET FORTH IN SECTION 2551, GRAVITYSANITARY SEWERS AND APPURTENANCES.

NAME: UPPER SAUCON TOWNSHIP
TYPICAL HOUSE CONNECTION
BASEMENT SERVICE

DATE: 06/01/2014 | REVISED: | REVISED:

DRAWN: GTC | REVISED: | REVISED:

SCALE: N.T.S. | CAD File Name: DX-1

No. DX-1

September 17, 2005 10:18:18 a.m. | Oper: GTC
ACD Drawing Name: Dx2r1.dwg

SCHREITER ENGINEERING ASSOCIATES
Engineers Planners Scientists
7 Raleigh Drive
Downingtown, PA.
19335-1107
Tel (610) 873-0520
Fax (610) 873-0520
Email KES1@AOL.COM

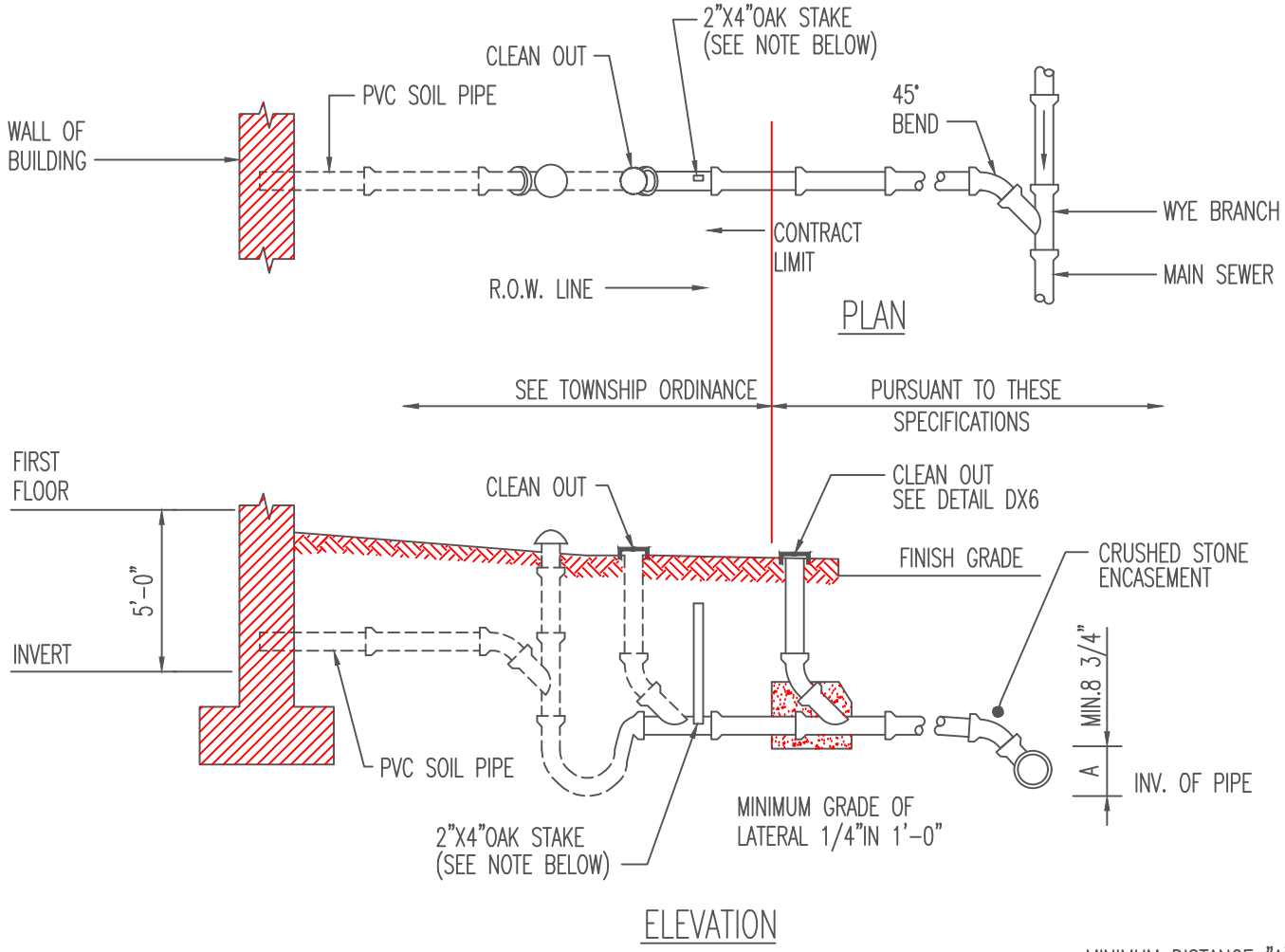

ELEVATION

NOTE:

IN NO CASE SHALL INVERT OF HOUSE CONNECTION BE LESS THAN 4' BELOW FINISH GRADE.
THE CONTRACTOR WILL MARK THE END OF ALL LATERALS WITH A 2x4 OAK STAKE, THE TOP TO REMAIN ±12" ABOVE FINISH GRADE. (NEW CONSTRUCTION ONLY)
ALL LATERAL PIPING SHALL MET THE REQUIEMENTS IN SECTION 2551, GRAVITY SANITARY SEWERS AND APPURTENANCES

MINIMUM DISTANCE "A"

8" SEWER	8 3/4"
10" SEWER	10 1/4"
12" SEWER	12"
15" SEWER	14 3/4"
18" SEWER	17 1/2"

NAME: UPPER SAUCON TOWNSHIP
TYPICAL HOUSE CONNECTION
FIRST FLOOR SERVICE

DATE: 06/01/2014 | REVISED: | REVISED:
DRAWN: GTC | REVISED: | REVISED:
SCALE: N.T.S. | CAD File Name: DX2

No. DX-2

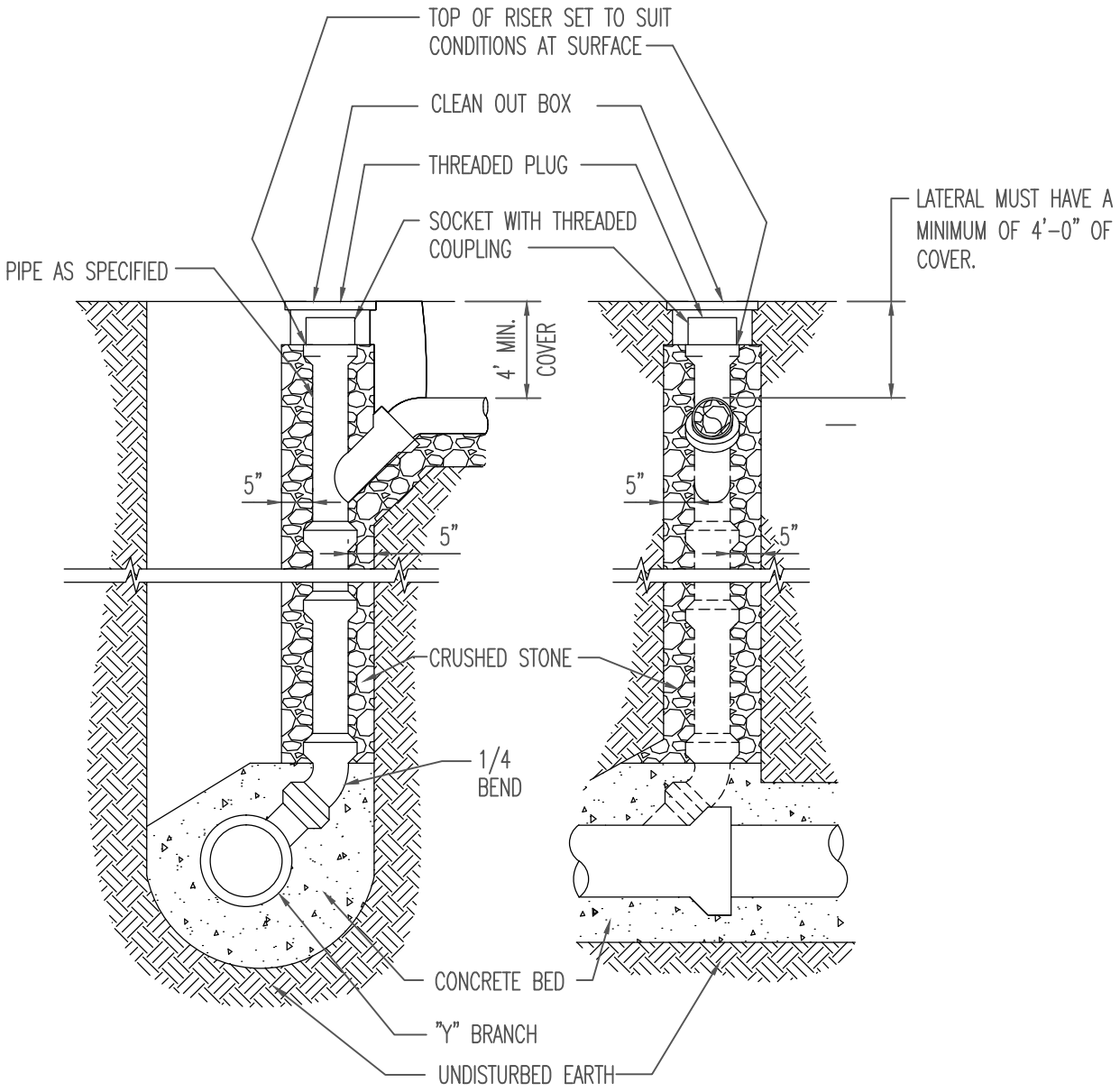

SCHREITER ENGINEERING ASSOCIATES
Engineers Planners Scientists

7 Raleigh Drive
Downingtown, PA.
19335-1107

Tel (610) 873-0520
Fax (610) 873-0520
Email KES1@AOL.COM

UPPER SAUCON TOWNSHIP

NAME:	DEEP CUT LATERAL		
DATE:	06/01/2014	REVISED:	REVISED:
DRAWN:	GTC	REVISED:	REVISED:
SCALE:	N.T.S.	CAD File Name: DX3	

DX3

No.

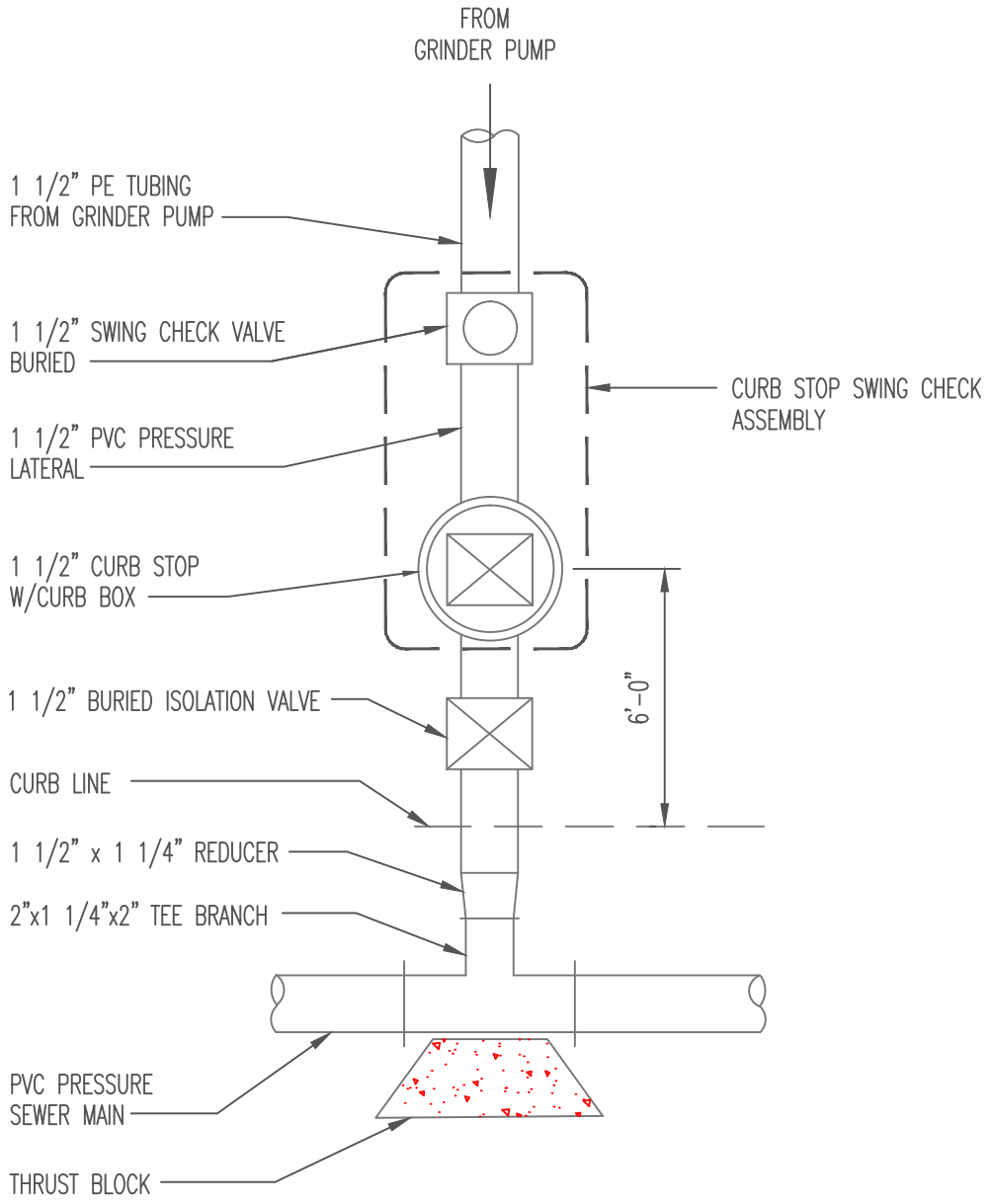

NOTES

1. ALL PIPING, VALVES AND FITTINGS TO BE INSTALLED IN CRUSHED STONE ENCASEMENT
2. MINIMUM COVER FOR LATERAL 4'-0"
3. CURB STOP CHECK VALVE ASSEMBLY ARE MANUFACTURED BY THE LATERAL CONNECTION CORPORATION. CURB STOP MUST INCLUDE VAVE COVER BOX.
4. ISOLATION VALVE ONLY REQUIRED FOR CONNECTIONS TO ISOLATE FUTURE CONNECTION POINT.

SCHREITER ENGINEERING ASSOCIATES
Engineers Planners Scientists
7 Raleigh Drive
Downingtown, PA.
19335-1107
Tel (610) 873-0520
Fax (610) 873-0520
Email KES1@AOL.COM

UPPER SAUCON TOWNSHIP

NAME:	LATERAL - LOW PRESSURE SEWER		
DATE:	06/01/2014	REVISED:	REVISED:
DRAWN:	GTC	REVISED:	REVISED:
SCALE:	N.T.S.	CAD File Name: DX4	

DX-4

No.

January 11, 2000 12:24:27 a.m. | Oper: acddevsys
Drawing: D013-026.dwg

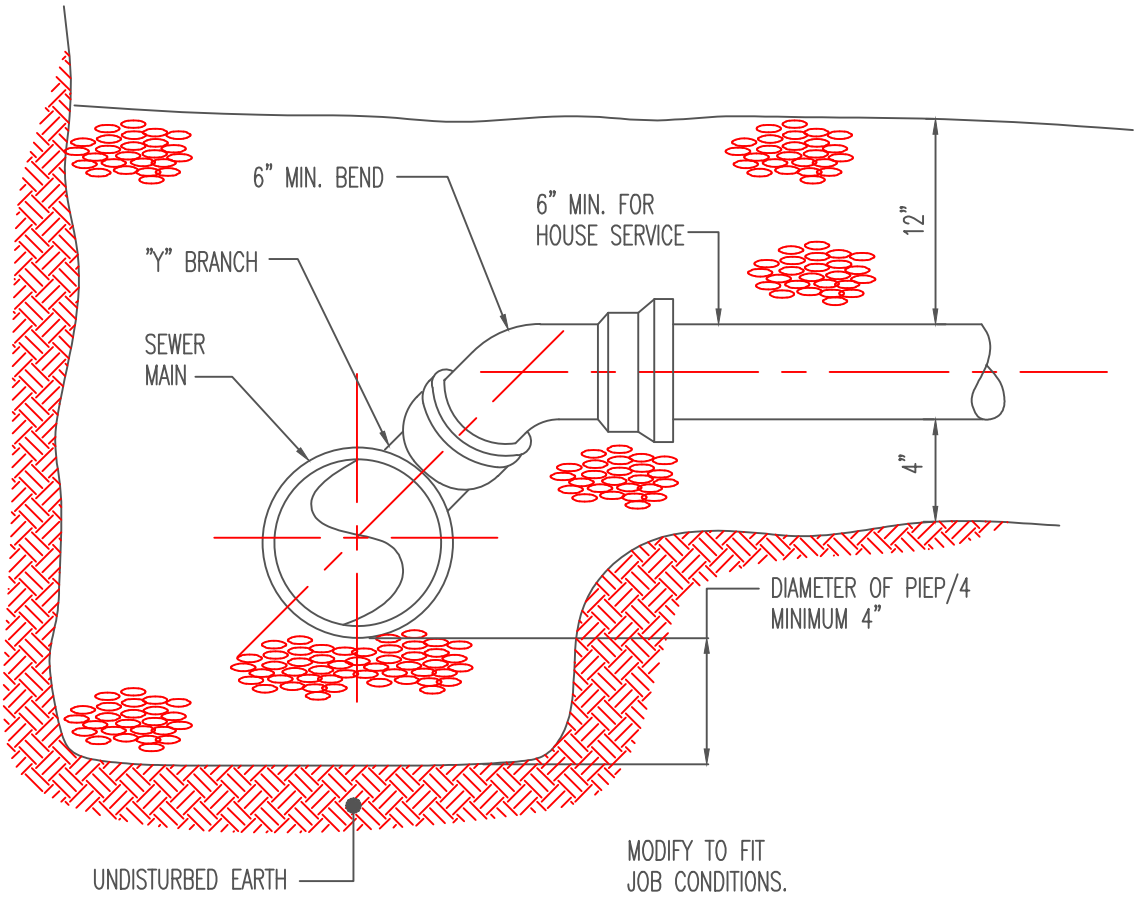

NOTE:

PROVIDE ADAPTOR WHEN NECESSARY

SCHREITER ENGINEERING ASSOCIATES
Engineers Planners Scientists
7 Raleigh Drive
Downingtown, PA.
19335-1107
Tel (610) 873-0520
Fax (610) 873-0520
Email KES1@AOL.COM

UPPER SAUCON TOWNSHIP
SANITARY SEWER LATERAL CONNECTION AT NEW SEWER MAIN

NAME:			
DATE:	06/01/2014	REVISED:	REVISED:
DRAWN:	ACD	REVISED:	REVISED:
SCALE:	N.T.S.	CAD File Name: DX5	

DX5

No.

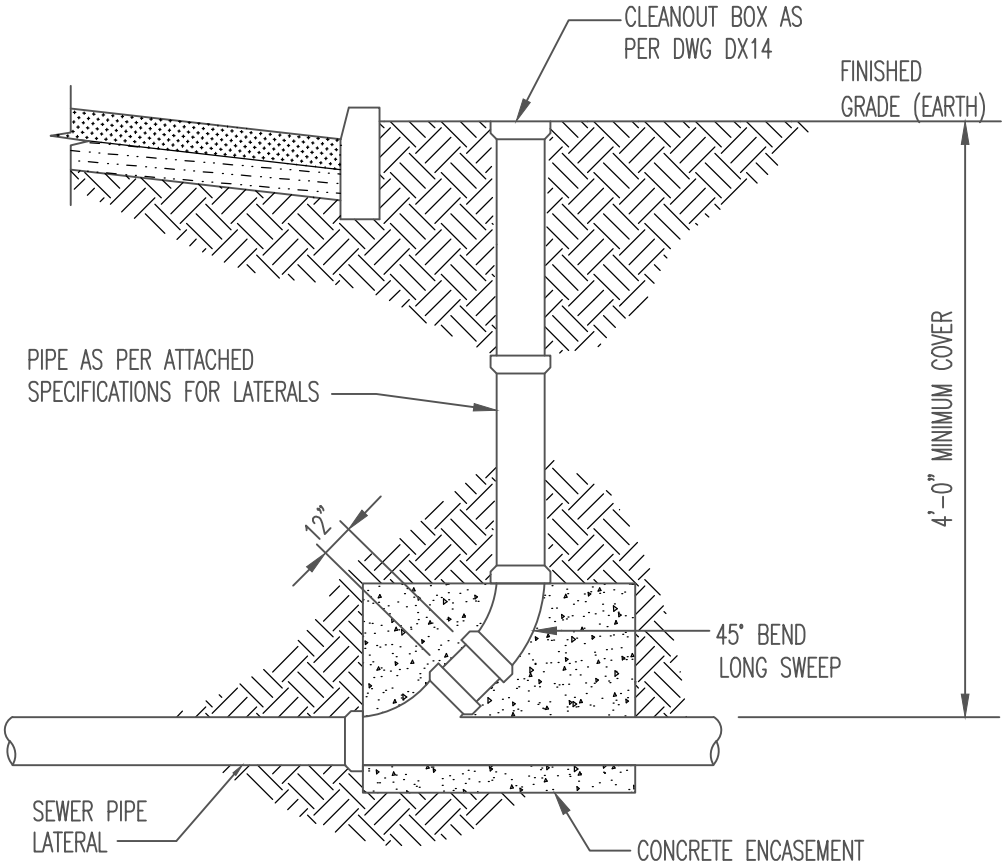

NOTES:

1. CLEANOUT TO BE INSTALLED ON HOUSE SIDE OF CURBLINE.
2. LATERAL CLEANOUT REQUIRED EVERY 100 FT. OF CHANGE OF DIRECTION GREATER THAN 22 ½°.

SCHREITER ENGINEERING ASSOCIATES
Engineers Planners Scientists
7 Raleigh Drive
Downingtown, PA.
19335-1107
Tel (610) 873-0520
Fax (610) 873-0520
Email KES1@AOL.COM

UPPER SAUCON TOWNSHIP
INTERMEDIATE CLEANOUT

NAME:			
DATE: 06/01/2014	REVISED:	REVISED:	
DRAWN: GTC	REVISED:	REVISED:	
SCALE: N.T.S.	CAD File Name: DX-6		

DX6

No.

June 12, 2002 12:10:16 a.m. | Oper: acd
Drawing: D013-033.dwg

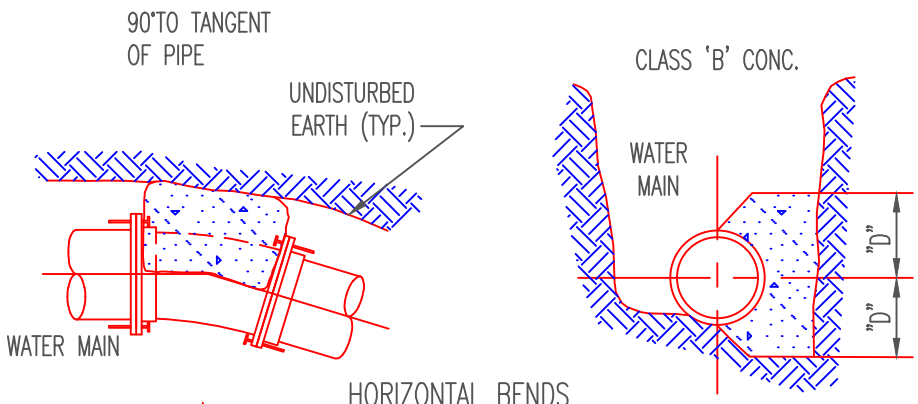

HORIZONTAL BENDS

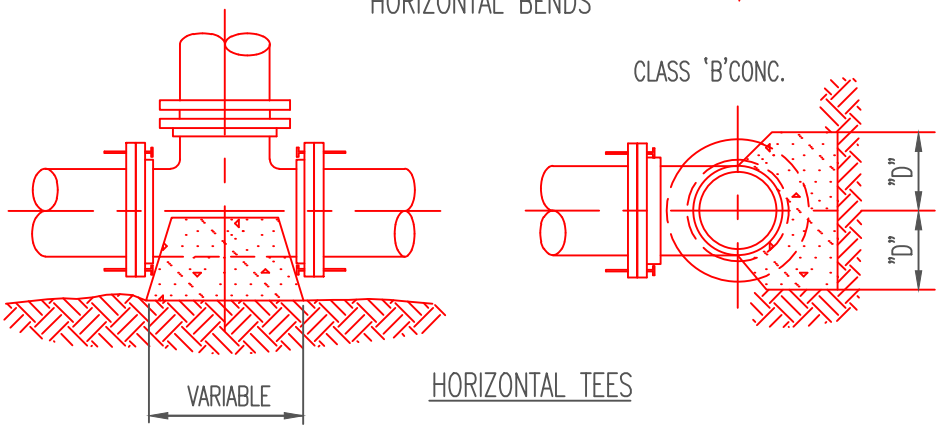

HORIZONTAL TEES

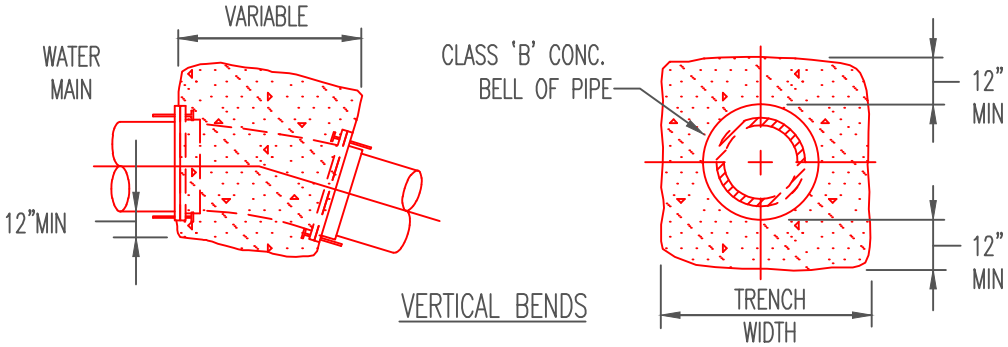

VERTICAL BENDS

NOTES:

1. THRUST BLOCKS MUST BEAR AGAINST UNDISTURBED EARTH.
2. SIZE OF THRUST BLOCKS TO BE DETERMINED INDIVIDUALLY AT TIME OF CONSTRUCTION BY ENGINEER.
3. PAYMENT UNDER ITEM No. ON A CUBIC YARDS BASIS.
4. HARNESS OR RESTRAINT PIPE IF ORDERED BY ENGINEER (SEE PLATE No.)
5. D" IS EQUAL TO DIAMETER OF PIPE.

SCHREITER ENGINEERING ASSOCIATES
Engineers Planners Scientists
7 Raleigh Drive
Downingtown, PA.
19335-1107
Tel (610) 873-0520
Fax (610) 873-0520
Email KES1@AOL.COM

UPPER SAUCON TOWNSHIP

NAME:	TYPICAL THRUST BLOCKS		
DATE:	06/01/2014	REVISED:	REVISED:
DRAWN:	ACD	REVISED:	REVISED:
SCALE:	N.T.S.	CAD File Name: DX7	

DX7

No.

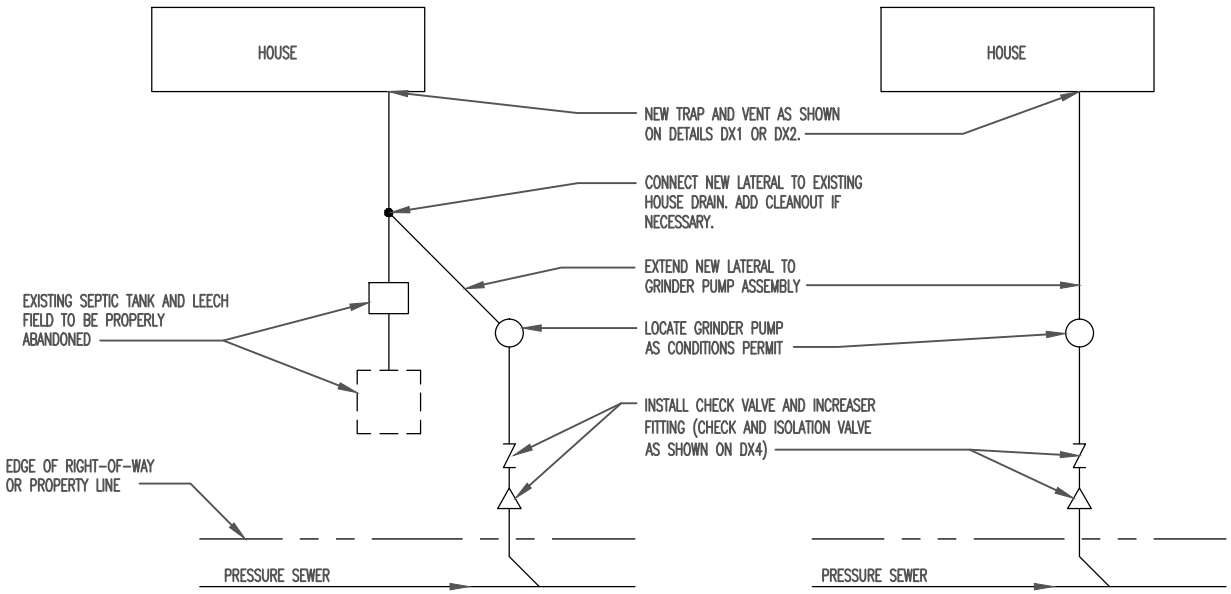

SEPTIC TANK BYPASS PLAN

NEW INSTALLATION PLAN

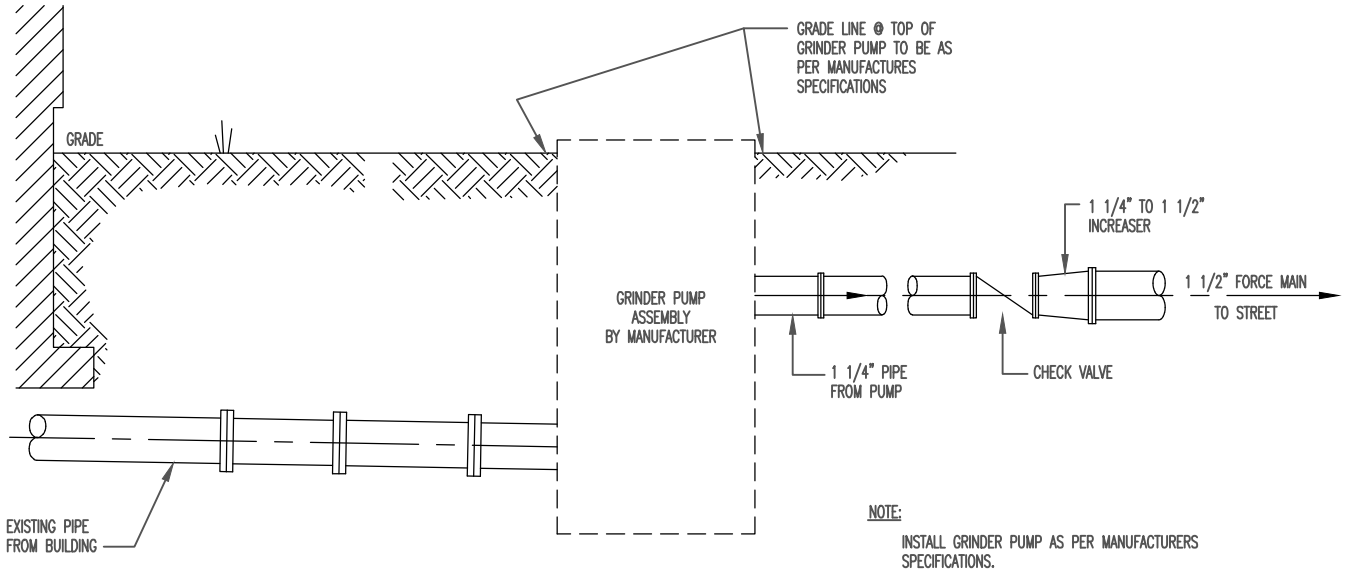

SECTION AT LATERAL

SCHREITER ENGINEERING ASSOCIATES
Engineers Planners Scientists
7 Raleigh Drive
Downingtown, PA.
19335-1107
Tel (610) 873-0520
Fax (610) 873-0520
Email KES1@AOL.COM

UPPER SAUCON TOWNSHIP

NAME:	STANDARD GRINDER PUMP INSTALLATION		DX8
DATE: 06/01/2014	REVISED:	REVISED:	
DRAWN: GTC	REVISED:	REVISED:	
SCALE: N.T.S.	CAD File Name: DX8		No.

Drawing: DX8

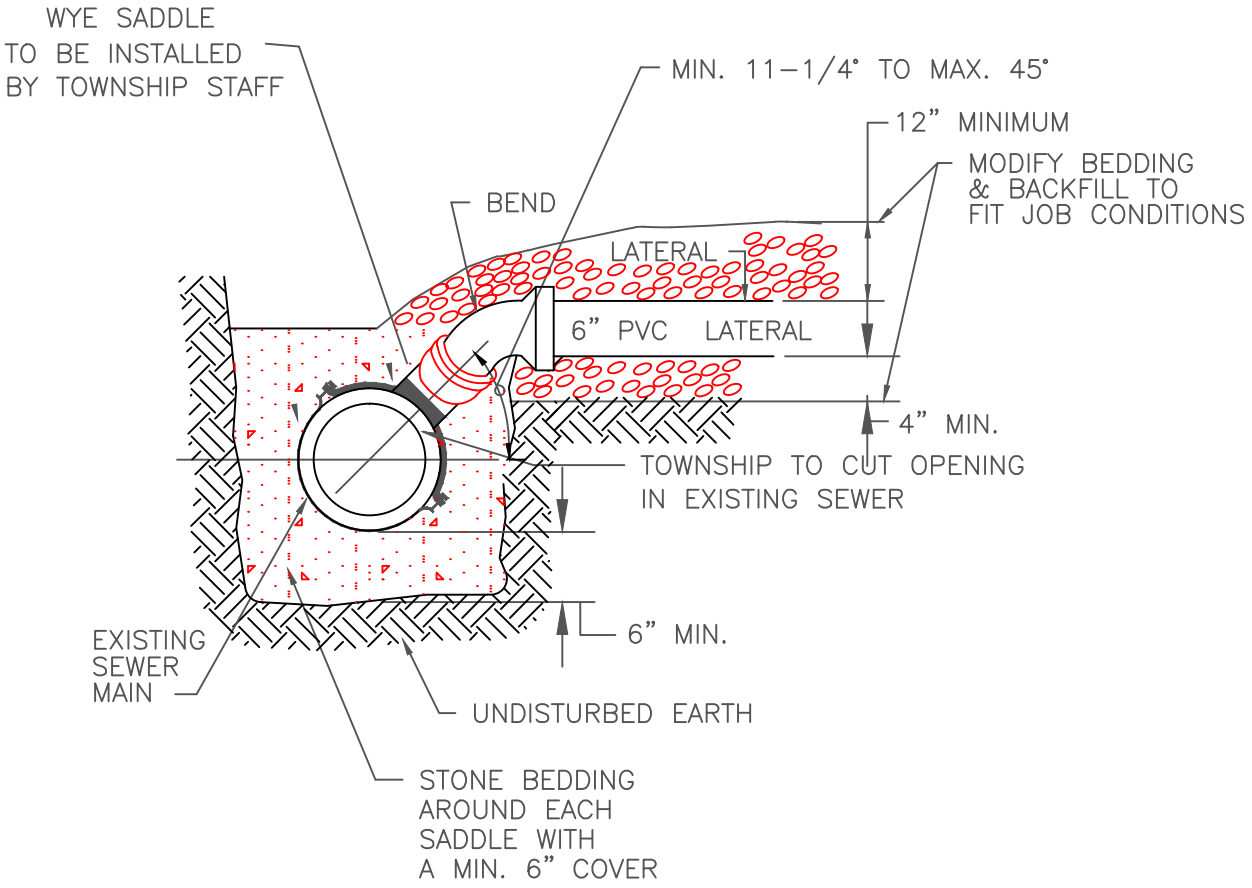

SCHREITER ENGINEERING ASSOCIATES
Engineers Planners Scientists
7 Raleigh Drive
Downingtown, PA.
19335-1107
Tel (610) 873-0520
Fax (610) 873-0520
Email KES1@AOL.COM

UPPER SAUCON OWNSHIP

NAME:	SADDLE CONNECTION FOR EXISTING SEWER		
DATE:	06/01/2014	REVISED:	REVISED:
DRAWN:		REVISED:	REVISED:
SCALE:	Not to Scale	CAD File Name:	

DX9

No.

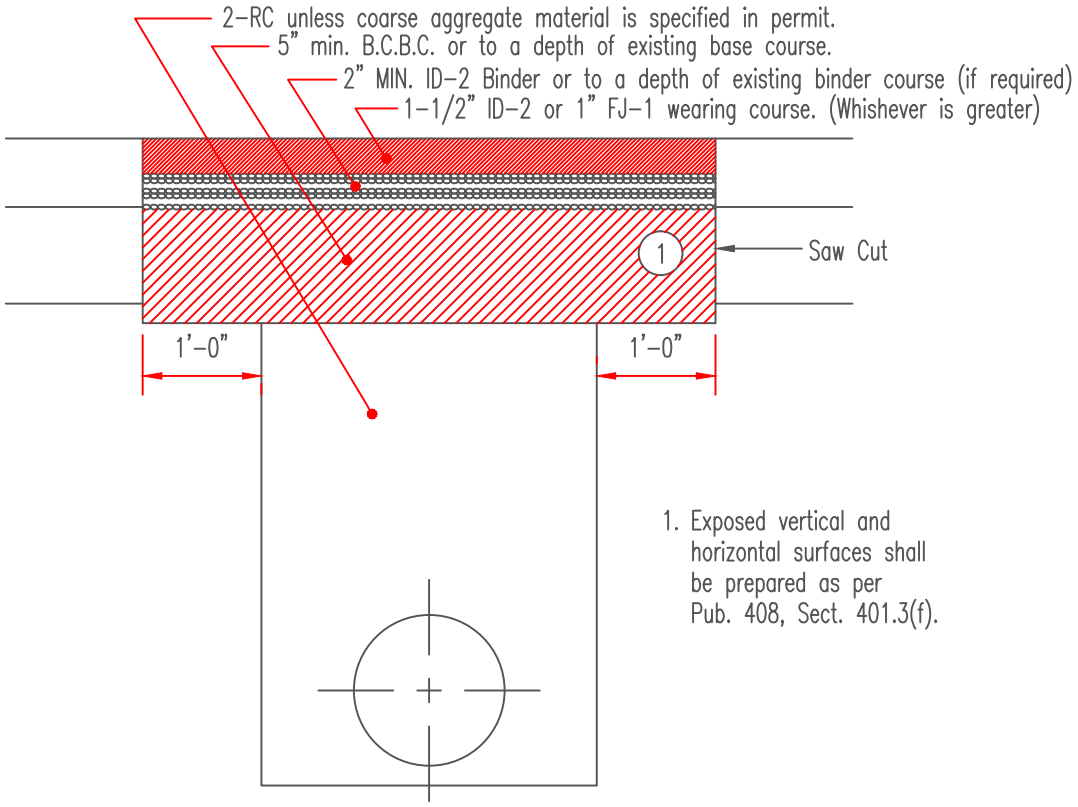

1. Exposed vertical and horizontal surfaces shall be prepared as per Pub. 408, Sect. 401.3(f).

FLEXIBLE PAVEMENT RESTORATION

SCALE: N.T.S.

PennDOT FIGURE 7-3

SCHREITER ENGINEERING ASSOCIATES
Engineers Planners Scientists
7 Raleigh Drive
Downingtown, PA.
19335-1107
Tel (610) 873-0520
Fax (610) 873-0520
Email KES1@AOL.COM

NAME:	UPPER SAUCON TOWNSHIP TOWNSHIP ROADWAY FLEXIBLE PAVEMENT RESTORATION		DX10
DATE: 06/01/2014	REVISED:	REVISED:	
DRAWN: ACD	REVISED:	REVISED:	
SCALE: AS NOTED	CAD File Name: D01307-3.DWG		No.

October 04, 1999 6:08:47 p.m. | Oper: acddevsys
Drawing: D01307-3.dwg

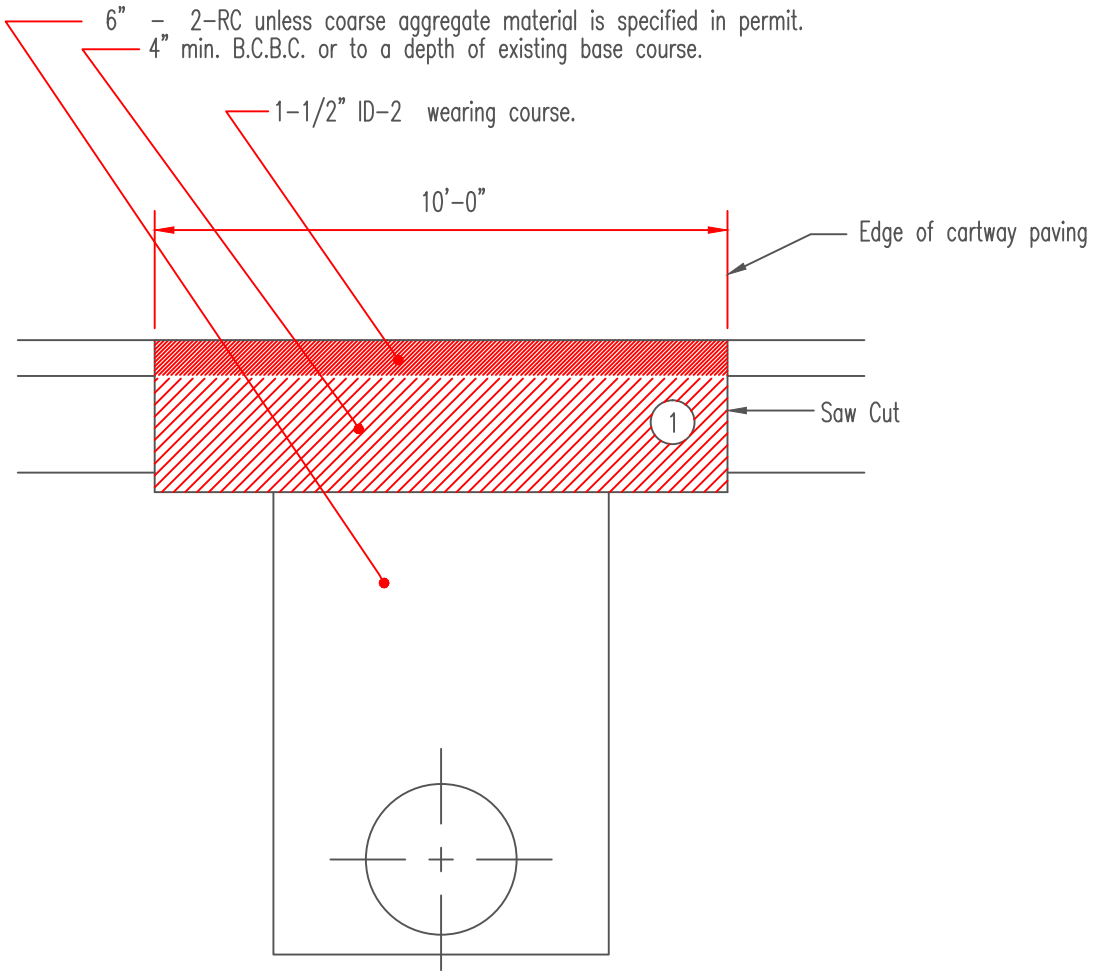

SCALE: N.T.S.

SCHREITER ENGINEERING ASSOCIATES
Engineers Planners Scientists
7 Raleigh Drive
Downingtown, PA.
19335-1107
Tel (610) 873-0520
Fax (610) 873-0520
Email KES1@AOL.COM

NAME:	UPPER SAUCON TOWNSHIP DRIVEWAY FLEXIBLE PAVEMENT RESTORATION		DX11
DATE: 06/01/2014	REVISED:	REVISED:	
DRAWN: ACD	REVISED:	REVISED:	
SCALE: AS NOTED	CAD File Name: D01307-4.DWG		No.

October 04, 1999 6:08:47 p.m. | Oper: acddevsys
Drawing: D01307-3.dwg

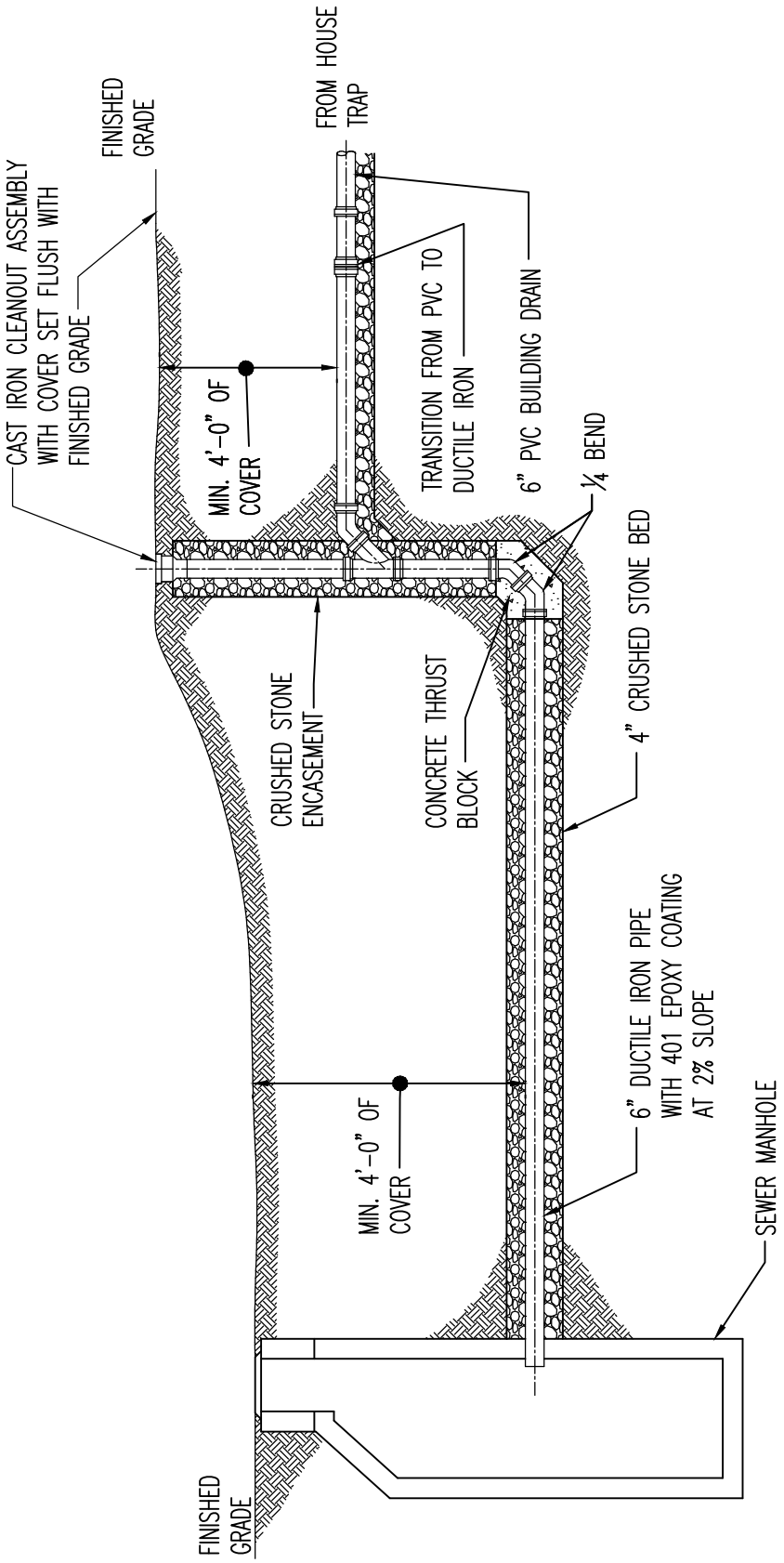

SCHREITER ENGINEERING ASSOCIATES
Engineers Planners Scientists

7 Raleigh Drive
Downingtown, PA.
19335-1107

Tel (610) 873-0520
Fax (610) 873-0520
Email KES1@AOL.COM

UPPER SAUCON TOWNSHIP

NAME:	SEWER LATERAL DROP DETAIL		
DATE:	06/01/2014	REVISED:	REVISED:
DRAWN:	GTC	REVISED:	REVISED:
SCALE:	N.T.S.	CAD File Name: DX12-13	

DX12

No.

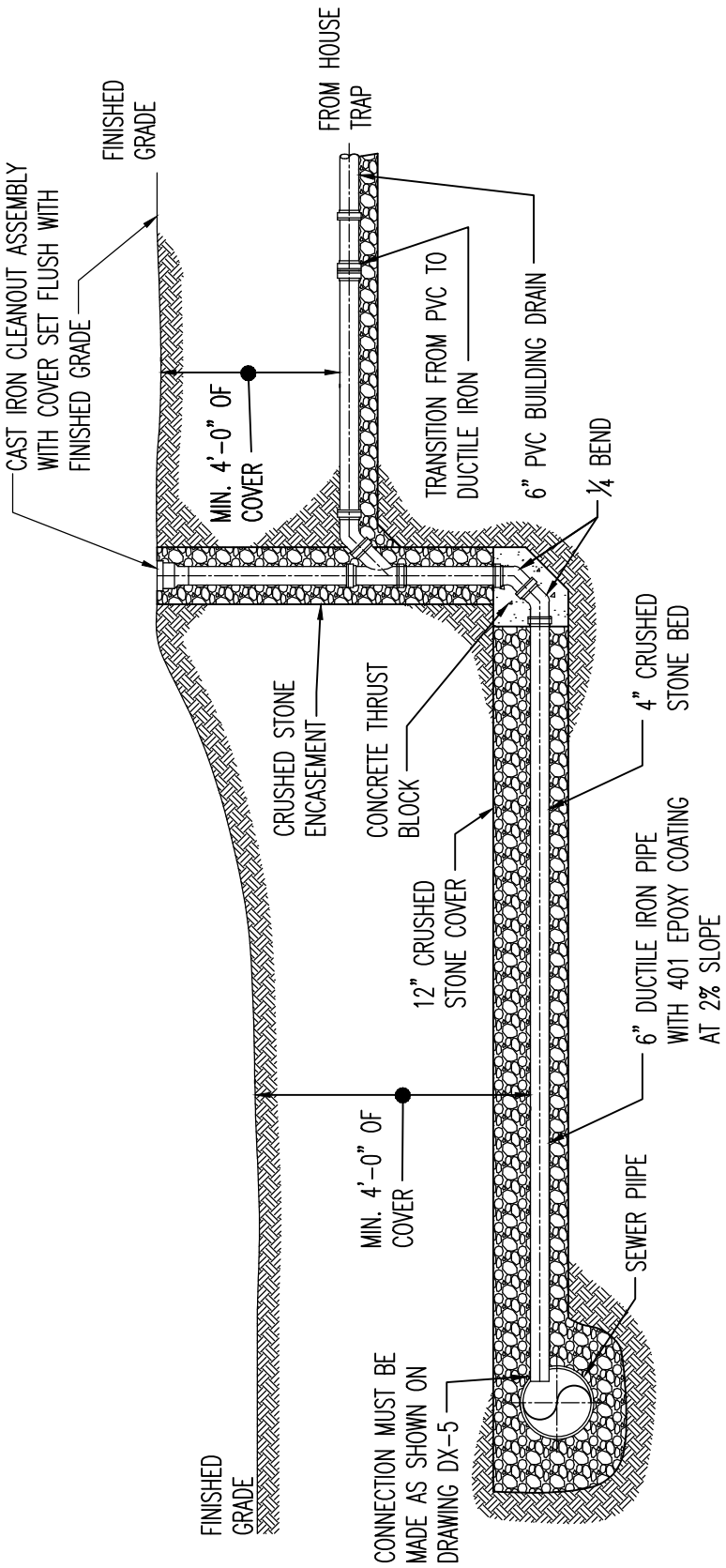

SCHREITER ENGINEERING ASSOCIATES
Engineers Planners Scientists

7 Raleigh Drive
Downingtown, PA.
19335-1107

Tel (610) 873-0520
Fax (610) 873-0520
Email KES1@AOL.COM

UPPER SAUCON TOWNSHIP

NAME:	SEWER LATERAL DROP DETAIL		
DATE:	06/01/2014	REVISED:	REVISED:
DRAWN:	GTC	REVISED:	REVISED:
SCALE:	N.T.S.	CAD File Name: DX12-13	

DX13

No.

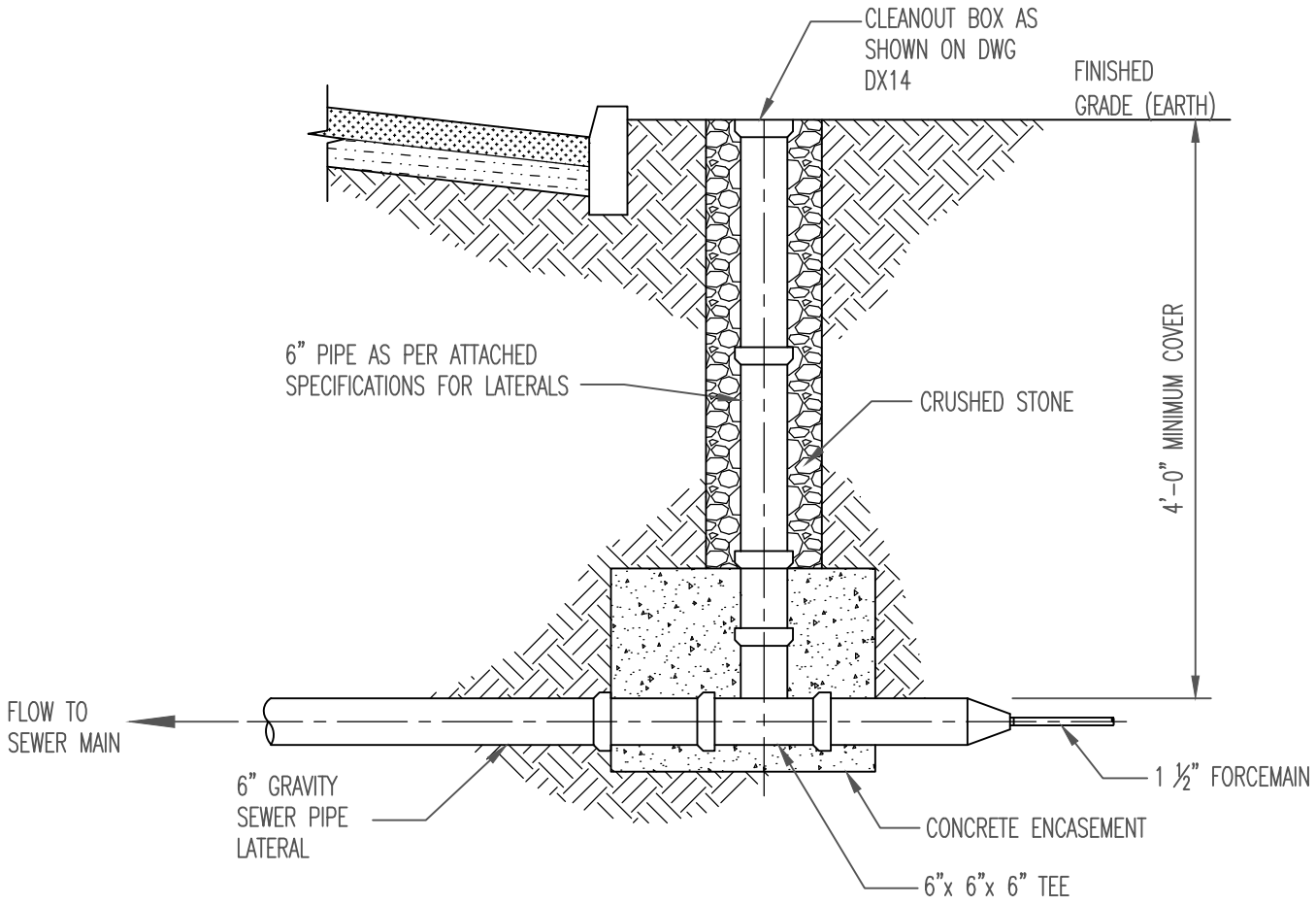

NOTES:

1. SOLVENT WELD PIPE FITTING SHALL BE USED AT CONNECTION OF FORCE MAIN TO GRAVITY SEWER PIPE.

SCHREITER ENGINEERING ASSOCIATES
Engineers Planners Scientists
7 Raleigh Drive
Downingtown, PA.
19335-1107
Tel (610) 873-0520
Fax (610) 873-0520
Email KES1@AOL.COM

NAME:	UPPER SAUCON TOWNSHIP LOW PRESSURE SEWER CONNECTION AT EXISTING GRAVITY SEWER MAIN		DX14
DATE: 3/1/14	REVISED:	REVISED:	
DRAWN: GTC	REVISED:	REVISED:	
SCALE: N.T.S.	CAD File Name: DX14		No.

June 12, 2002 12:10:16 a.m. | Oper: acd
Drawing: D013-033.dwg

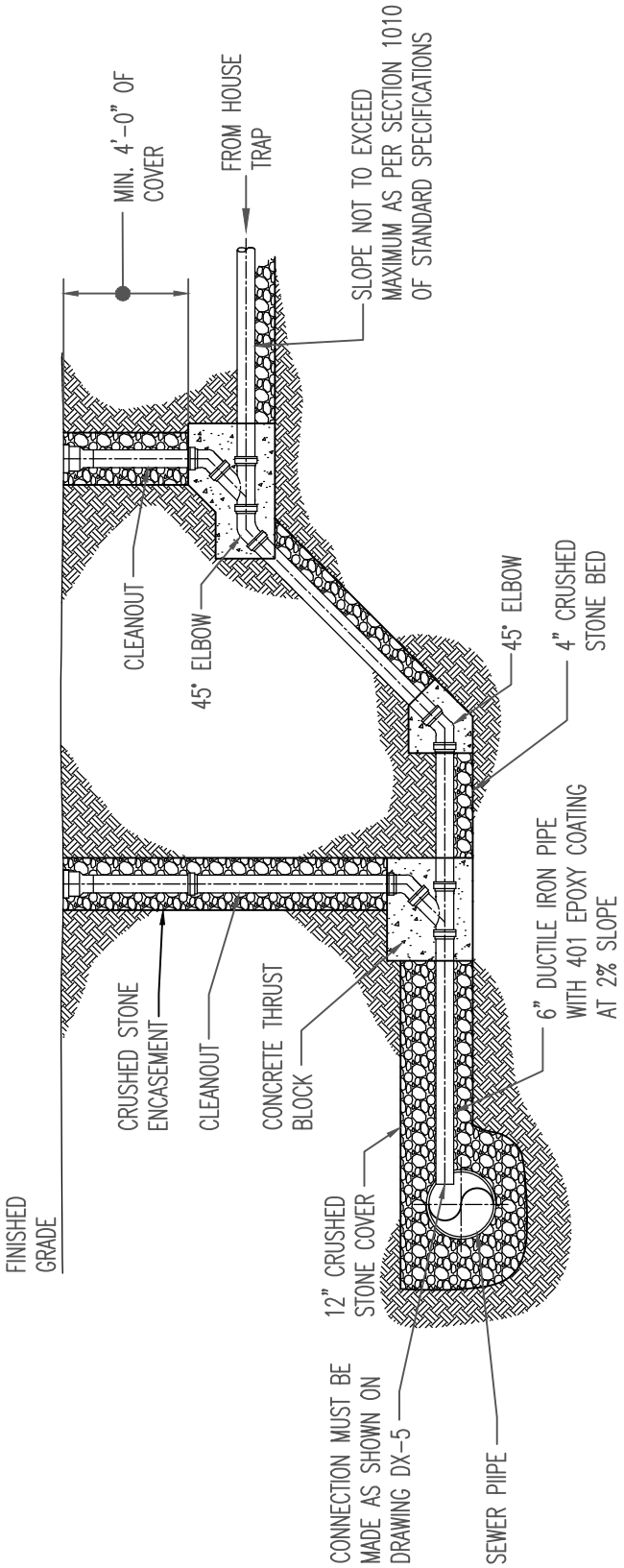

SCHREITER ENGINEERING ASSOCIATES
Engineers Planners Scientists

7 Raleigh Drive
Downingtown, PA.
19335-1107

Tel (610) 873-0520
Fax (610) 873-0520
Email KES1@AOL.COM

UPPER SAUCON TOWNSHIP

NAME:	DEEP LATERAL CONNECTION		
DATE:	06/01/2014	REVISED:	REVISED:
DRAWN:	GTC	REVISED:	REVISED:
SCALE:	N.T.S.	CAD File Name: DX15	

DX15

No.

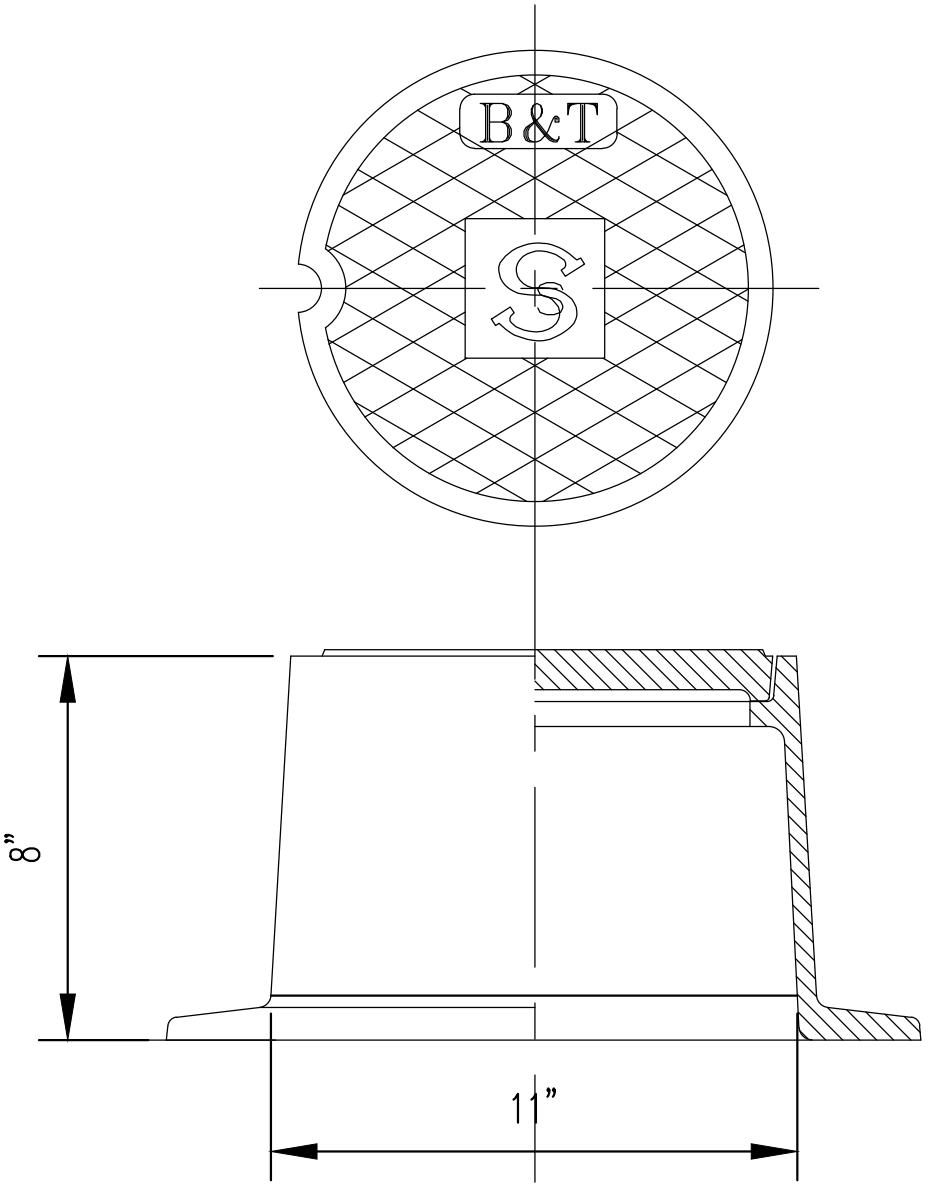

CLEANOUT BOX

NOTES:

1. CLEAN BOX AS PER BINGHAM & TAYLOR OR EQUAL.
2. STYLE SHOWN IS B&T 1975LS – THIS MODEL HAS AN "S" IN THE CENTER FOR SEWER.

SCHREITER ENGINEERING ASSOCIATES
Engineers Planners Scientists

7 Raleigh Drive
Downingtown, PA.
19335–1107

Tel (610) 873–0520
Fax (610) 873–0520
Email KES1@AOL.COM

UPPER SAUCON TOWNSHIP			DX16
NAME: CLEAN OUT BOX			
DATE: 06/01/2014	REVISED:	REVISED:	
DRAWN: GTC	REVISED:	REVISED:	
SCALE: 3" = 1'–0"	CAD File Name:		No.

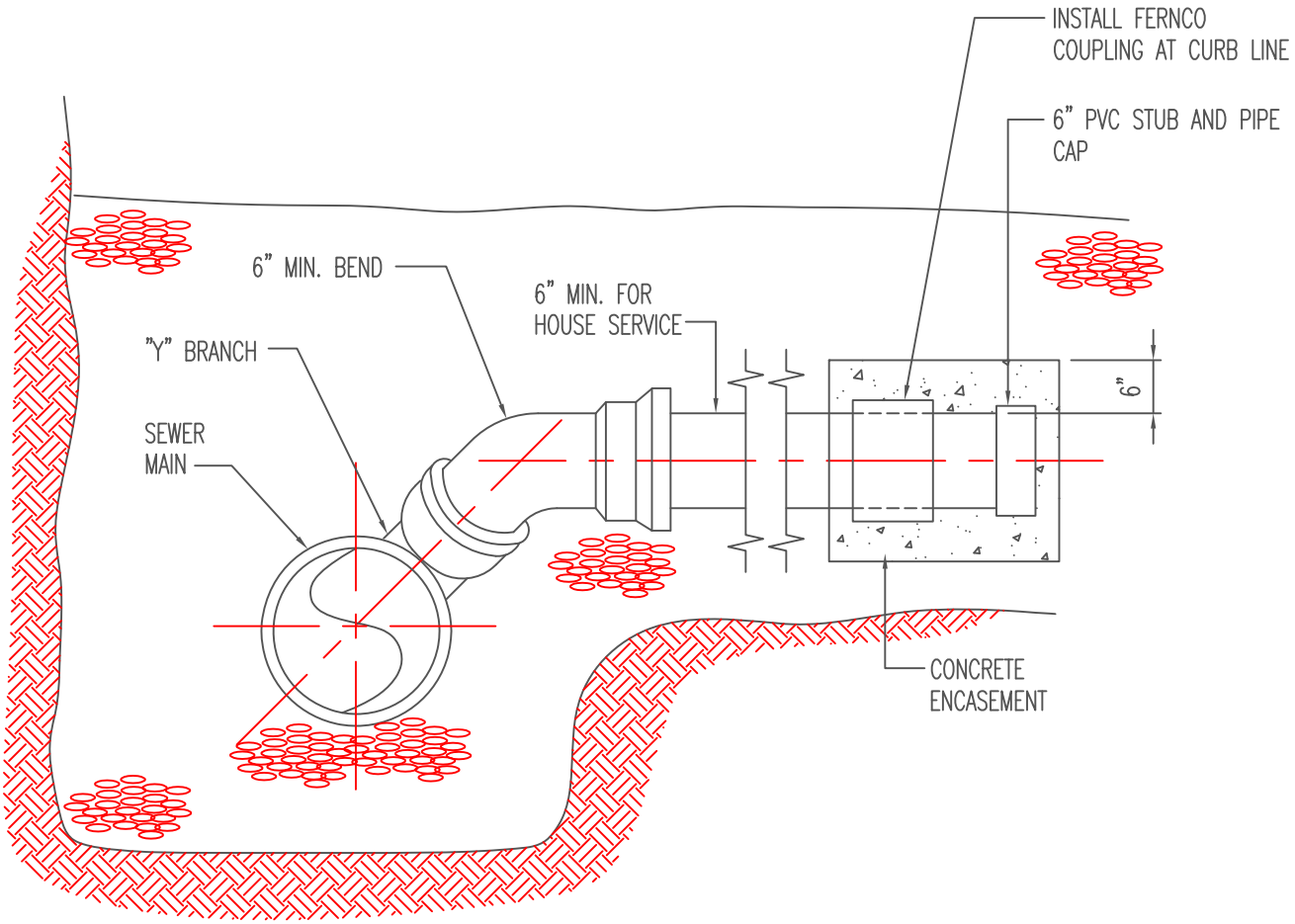

NOTE:

CONCRETE ENCASEMENT MUST BE PLACED ON UNDISTURBED EARTH OR PIPE BEDDING MATERIAL

SCHREITER ENGINEERING ASSOCIATES
Engineers Planners Scientists
7 Raleigh Drive
Downingtown, PA.
19335-1107
Tel (610) 873-0520
Fax (610) 873-0520
Email KES1@AOL.COM

NAME:	UPPER SAUCON TOWNSHIP CAPPING OF EXISTING SEWER LATERAL PIPE (T.C. PIPE)		DX17
DATE: 12/1/2015	REVISED:	REVISED:	
DRAWN: GTC	REVISED:	REVISED:	
SCALE: N.T.S.	CAD File Name: DX17		No.

Plotted on: Wed: Dec 02 2015 9:32am
File: DX17.dwg

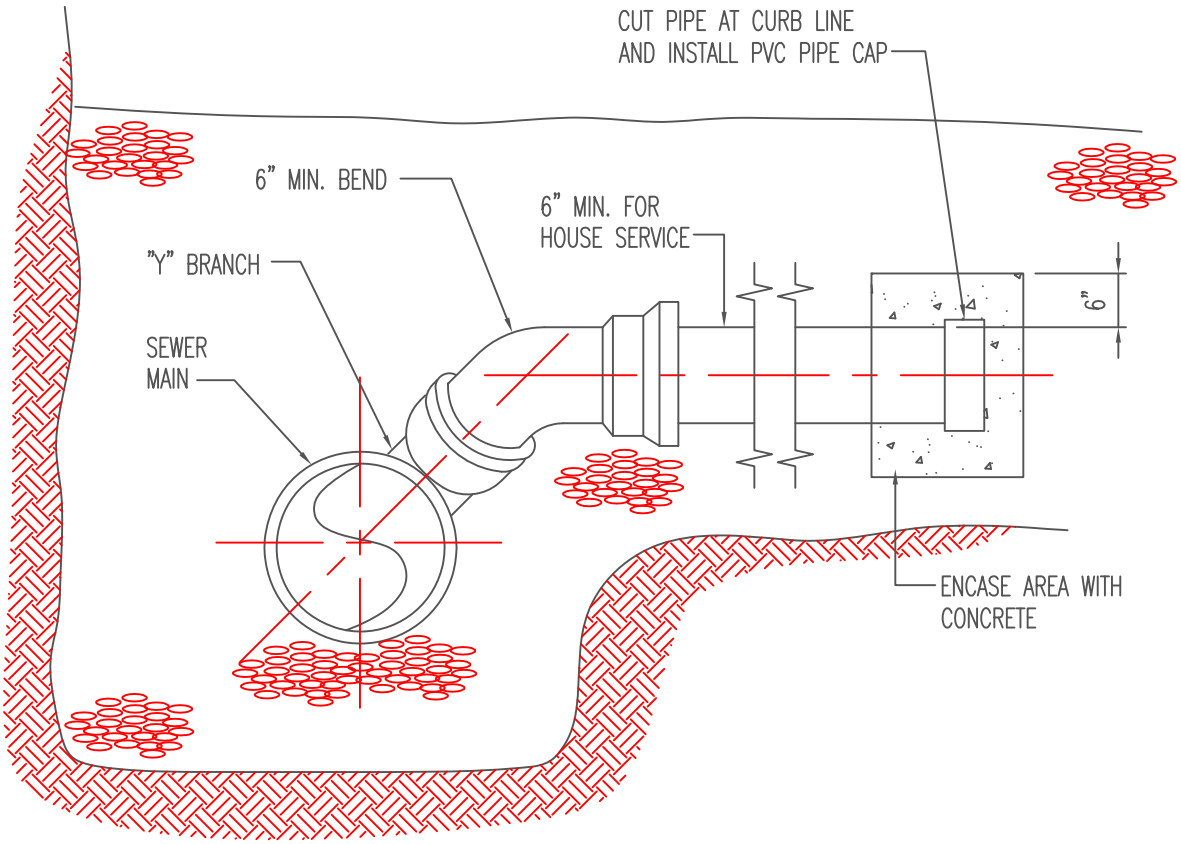

SCHREITER ENGINEERING ASSOCIATES
Engineers Planners Scientists

7 Raleigh Drive
Downingtown, PA.
19335-1107

Tel (610) 873-0520
Fax (610) 873-0520
Email KES1@AOL.COM

NAME:	UPPER SAUCON TOWNSHIP CAPPING OF EXISTING SEWER LATERAL PIPE (PVC PIPE)		DX18
DATE:	12/1/2015	REVISED:	REVISED:
DRAWN:	GTC	REVISED:	REVISED:
SCALE:	N.T.S.	CAD File Name: DX18	No.

Plotted on: Wed: Dec 02 2015 9:10am
File: DX18.dwg

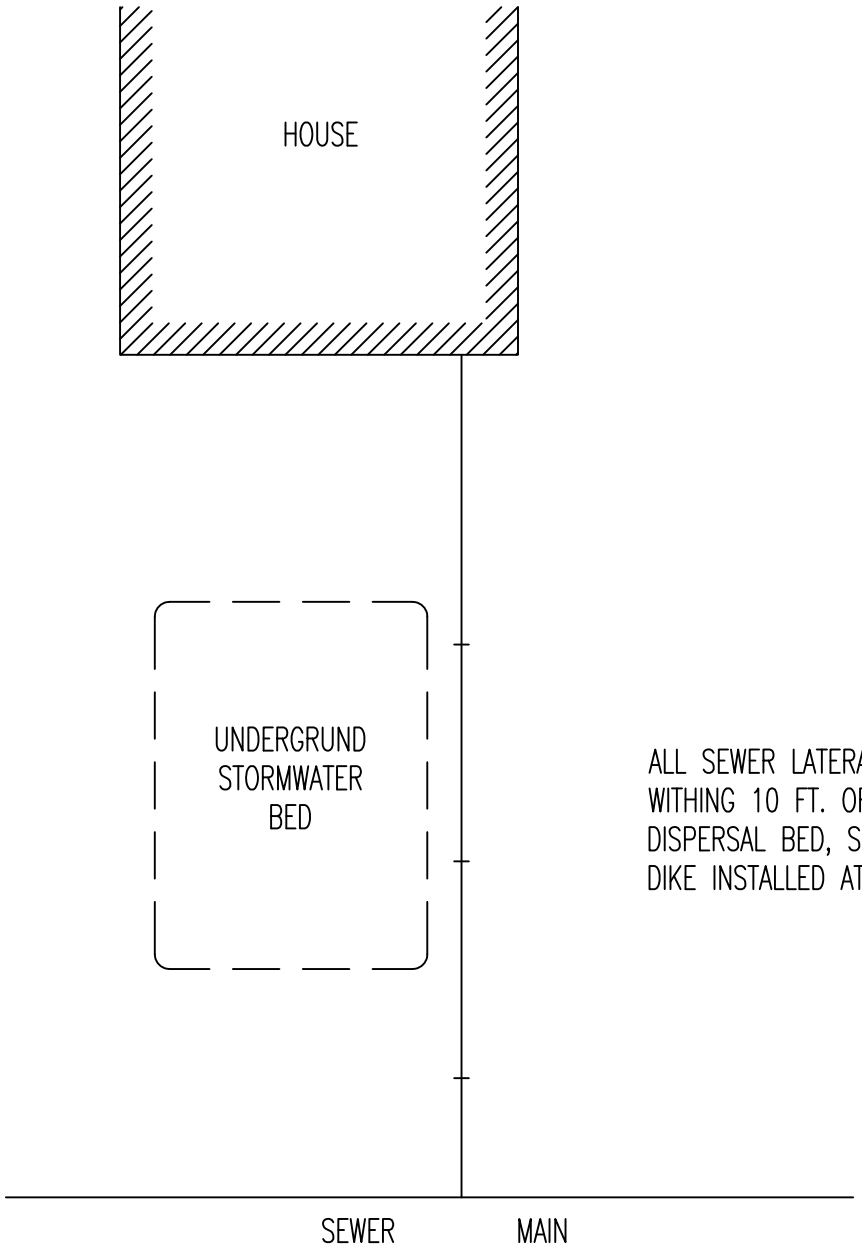

ALL SEWER LATERAL PIPING LOCATED WITHING 10 FT. OF A STORMWATER DISPERSAL BED, SHALL HAVE A CLAY DIKE INSTALLED AT EACH PIPE JOINT.

SCHREITER ENGINEERING ASSOCIATES
Engineers Planners Scientists
7 Raleigh Drive
Downingtown, PA.
19335-1107
Tel (610) 873-0520
Fax (610) 873-0520
Email KES1@AOL.COM

UPPER SAUCON TOWNSHIP

NAME: LATERAL LOCATED AJACENT TO STORM WATER DISPERSAL BED

DATE: 09/01/16	REVISED: rev1	REVISED: rev3
DRAWN: GTC	REVISED: rev2	REVISED: rev4
SCALE: AS NOTED	CAD File Name: D013-041	

DX 19

No.

Plotted on: Tue: Aug 30 2016 1:00pm | Oper: GTC
File: DX19.dwg